CDM Smith
210 25th Avenue North, Suite 1102
Nashville, Tennessee 37203
Telephone: (615) 320-3161
Fax: (615) 320-6560

LETTER OF TRANSMITTAL

To: Plan Holders
From: Katy Turney for Bob Huguenard
Date: December 22, 2017
Re: City of Franklin, Tennessee
Franklin WRF Modifications & Expansion Project - COF Contract No. 2017-0264
Addendum No. 12

WE ARE SENDING YOU:

[X] Attached
[ ] Shop Drawings
[ ] Copy of Letter
[ ] Plans
[ ] Under Separate Cover
[ ] Prints
[ ] Change Order
[ ] Preliminary Drawings
[X] Other:

COPIES	DATE	DESCRIPTION
1	12/22/17	Addendum No. 12

THESE ARE TRANSMITTED as checked below:

[ ] For Approval
[X] For Your Use
[ ] As Requested
[ ] For Review and Comment
[X] For Bids Due
[ ] Approved as Submitted
[ ] Approved by Payment
[ ] Returned for Corrections
[ ] Resubmit ___ copies for approval
[ ] Submit ___ copies for distribution
[ ] Return ___ corrected prints

COMMENTS:

Enclosed please find Addendum No. 12 for the above referenced project. This is the final Addendum.

Kindly acknowledge your receipt of this Addendum by e-mailing or faxing the attached Confirmation of Receipt form to the attention of Ms. Katy Turney (turneyk@cdmsmith.com, fax 615-320-6560).

Distribution: Project File (14915-96594-WRF)

CITY OF FRANKLIN, TENNESSEE
FRANKLIN WRF MODIFICATIONS & EXPANSION PROJECT
COF CONTRACT NO. 2017-0264 / CDM SMITH PROJECT NO. 14915-96594-WRF

CONFIRMATION OF RECEIPT OF ADDENDUM NO. 12

This is to confirm that I have received Addendum No. 12, issued on December 22, 2017, for the City of Franklin, Tennessee – Franklin WRF Modifications & Expansion Project.

Recipient's Name: _____
(Print)

Recipient's Signature: _____

Company: _____

Date: _____

Please e-mail or fax this completed Confirmation of Receipt form to Ms. Katy Turney at CDM Smith (turneyk@cdmsmith.com, fax 615-320-6560).

CITY OF FRANKLIN, TENNESSEE
FRANKLIN WRF MODIFICATIONS & EXPANSION PROJECT
COF CONTRACT NO. 2017-0264 / CDM SMITH PROJECT NO. 14915-96594-WRF

BID OPENING DATE: Thursday, January 4, 2018, at 2:00 p.m. Central Time

ADDENDUM NO. 12
December 22, 2017

The following additions, deletions, modifications, and clarifications shall be incorporated into the above referenced bid. These items shall have the full force and effect as the Contract Documents and cost involved shall be included in the bid price.

I. WITHIN THE BIDDING DOCUMENTS & CONTRACT DOCUMENTS

1. SECTION 00010 – TABLE OF CONTENTS
   a. On Page 00010-3, insert the new **Section 02630** and the title **"Storm Drainage Utilities".**
   b. On Page 00010-4:
      i. Insert the new **Section 07540** and the title **"Fluid-Applied Elastomeric Roof Coatings Over Polyurethane Foam (PUF)".**
      ii. Insert the new **Section 07545** and the title **"Sprayed Polyurethane Foam (PUF) for Digester Roofing System".**
   c. On Page 00010-5, insert the new **Section 09960** and the title **"Plastic Sheet Liner".**

2. SECTION 00020 – NOTICE TO BIDDERS
   a. On Page 00020-4, delete the paragraph immediately following Paragraph V, and insert the following paragraph in its place.
   "The allotted time for construction is 1,182 calendar days to Substantial Completion and 1,277 days to Final Completion."

3. SECTION 00100 – INSTRUCTIONS TO BIDDERS
   a. This Section has been reissued. See attached.

4. SECTION 00300 – BID FORM
   a. This Section has been reissued. See attached.

5. SECTION 00500 – AGREEMENT
   a. On Page 00500-1, in Article 3.1:
      i. Delete the words "1,000 calendar days", and insert the words **"1,182 calendar days"** in their place.
      ii. Delete the words "1,095 calendar days", and insert the words **"1,277 calendar days"** in their place.
   b. On Page 00500-3, in Article 7.7, insert the number **"1"** in the first blank space, and insert the number **"12"** in the second blank space.

6. SECTION 00800 – SUPPLEMENTARY CONDITIONS
   a. On Page 00800-2, insert the following new Article SC-3.03.
      "SC-3.03
      "Add the following new Paragraph 3.03C after Paragraph 3.03B of the General Conditions to read as follows.
      "C. Where there are conflicts between the specifications or the specifications and the drawings, the more stringent of the requirements shall apply."

   b. On Page 00800-7, insert the following new Article SC-6.03A.
      "SC-6.03A
      "Insert the following sentences at the end of Paragraph 6.03A of the General Conditions.
      "The Contractor shall be responsible for all power cost associated with any temporary systems and facilities, and the Owner shall be responsible for power costs associated with any permanent systems and facilities. Permanent systems and facilities include permanent equipment, HVAC systems, other mechanical systems, and lighting that is powered through permanent panels. Temporary systems and facilities would include the Contractor's trailers, temporary lighting, temporary HVAC systems, temporary bypass pumping systems, and other temporary systems and facilities required in the performance of the Contractor's work. The Contractor's temporary systems and facilities shall be powered through the Contractor's temporary electrical system."

II. WITHIN THE TECHNICAL SPECIFICATIONS, DIVISIONS 1 THROUGH 16

1. SECTION 01025 – MEASUREMENT AND PAYMENT
   a. This Section has been reissued. See attached.

2. SECTION 01100 – SPECIAL PROJECT PROCEDURES
   a. On Page 01100-8, in Paragraph 1.26A:
      i. At the beginning of the second sentence, insert the words **"Necessary temporary".**
      ii. At the end of the paragraph, insert the following sentences: **"The Contractor shall pay for power associated with temporary systems and facilities, and the Owner shall pay for power associated with permanent systems and facilities. See Article SC-6.03A of the Supplemental Conditions."**

3. SECTION 01500 – TEMPORARY FACILITIES
   a. On Page 01500-5:
      i. In Paragraph 3.03A, delete the first sentence in its entirety, and insert the following sentences in its place: **"The Contractor shall furnish power for temporary systems and facilities (See Article SC-6.03A of the Supplemental Conditions), including 220 volt service for welding, complete with wiring, lamps and similar equipment as required to adequately light all work areas**

and with sufficient power capacity to meet the project temporary systems and facilities needs."

ii. Delete Paragraph 3.03B in its entirety, and re-number subsequent paragraphs accordingly.

4. SECTION 01665 – EQUIPMENT TESTING AND STARTUP

a. On Page 01665-3, delete Paragraph 3.01L in its entirety, and insert the following new Paragraph 3.01L in its place.
"L. The Contractor shall furnish all labor, materials, water, air, oil, temporary power, fuel, chemicals, test equipment and other items required to conduct the field tests, including re-tests, unless otherwise specified."

b. On Page 01665-6, in Paragraph 3.04C, delete the first sentence in its entirety, and insert the following sentence in its place: **"The Contractor shall furnish all labor, materials, water, air, oil, temporary power, fuel, chemicals, test equipment and other items required to conduct the field tests, including re-tests, unless otherwise specified."**

5. SECTION 02050 – DEMOLITION AND MODIFICATIONS

a. This Section has been reissued. See attached.

6. SECTION 02605 – PRECAST CONCRETE MANHOLES AND STRUCTURES

a. On Page 02605-1, insert the following new Paragraph 1.02D.
"D. Plastic sheet liner is included in Section 09960."

b. On Page 02605-10, insert the following new Paragraph 3.01H.
"H. PVC Lining
"1. Where PVC lining of precast manholes or structures is required by the Drawings, the liner shall be installed at the precast manufacturer's factory, and joints between lined manhole or structure sections shall be field welded in accordance with Section 09960."

7. SECTION 02616 – DUCTILE IRON PIPE AND FITTINGS

a. On Page 02616-3, insert the following new Paragraph 1.04B.9, and re-number subsequent paragraphs accordingly.
"9. AWWA C217 - Microcrystalline Wax and Petrolatum Tape Coating Systems for Steel Water Pipe and Fittings."

b. On Page 02616-8, before the last sentence of Paragraph 2.03C, insert the following sentence: **"Retainer glands shall be used to restrain mechanical joint valves and fittings."**

c. On Page 02616-13:

i. In Paragraph 3.02B.2, delete the last sentence in its entirety, and insert the following sentence in its place: **"After installation, encapsulate bolts and nuts using wax sealing tape per AWWA Standard C217, and install polyethylene encasement as specified."**

ii. In Paragraph 3.02B.5, delete the last sentence in its entirety, and insert the following sentence in its place: **"After installation, encapsulate bolts and nuts using wax sealing tape per AWWA Standard C217."**

iii. In Paragraph 3.02B.6, delete the third and fourth sentences in their entirety, and insert the following sentence in their place: **"After installation, encapsulate bolts and nuts using wax sealing tape per AWWA Standard C217, and install protective wrap recommended by the manufacturer or as required herein."**

8. SECTION 02630 – STORM DRAINAGE UTILITIES
   a. Insert this new Section, attached.

9. SECTION 05500 – MISCELLANEOUS METAL
   a. On Page 05500-8:
      i. In the sixth sentence of Paragraph 2.05B, delete the word "304".
      ii. Insert the following new Paragraph 2.05C, and re-number subsequent paragraphs accordingly.
      "C. Steel railing and handrail shall be a welded steel pipe system, galvanized after fabrication. Post, rails and fittings shall conform to ASTM A53 or A501. Splice and expansion sleeves shall be Type 304 stainless steel. Brackets and plate work shall conform to ASTM A36. Fastening hardware shall be Type 304 stainless steel. Steel railing, including posts and rails, shall be sealed by welding closure plates in all openings."

10. SECTION 05510 – METAL STAIRS AND RAILING SYSTEMS
    a. On Page 05510-1, delete Paragraph 1.01A in its entirety, and insert the following Paragraph 1.01A in its place.
    "A. Furnish all labor, materials, equipment and incidentals required and design, fabricate and install metal pan type stairs and landings with custom metal handrail system at lobby stair and steel pipe handrails at other stairs, all as shown on the Drawings and as specified herein."
    b. On Page 05510-3, delete Paragraph 2.02G and sub-paragraphs in their entirety.

11. SECTION 07540 – FLUID-APPLIED ELASTOMERIC ROOF COATINGS OVER POLYURETHANE FOAM (PUF)
    a. Insert this new Section, attached.

12. SECTION 07545 – SPRAYED POLYURETHANE FOAM (PUF) FOR DIGESTER ROOFING SYSTEM
    a. Insert this new Section, attached.

13. SECTION 09960 – PLASTIC SHEET LINER
    a. Insert this new Section, attached.

14. SECTION 11211 – VERTICAL SPLIT CASE CENTRIFUGAL BOOSTER PUMPS
    a. On Page 11211-10, delete Paragraph 3.04C.1 in its entirety, and insert the following new Paragraph 3.04C.1 in its place.
    "1. Supply all necessary temporary power and water."

15. SECTION 11214 – VERTICAL TURBINE PUMPS
    a. On Page 11214-17, delete Paragraph 3.03C.1 in its entirety, and insert the following new Paragraph 3.03C.1 in its place.
       "1. Supply all necessary temporary power and water."

16. SECTION 11223 – VERTICAL SHAFT MIXERS (BNR BASINS)
    a. On Page 11223-12, delete Paragraph 3.03C.1 in its entirety, and insert the following new Paragraph 3.03C.1 in its place.
       "1. Supply all necessary temporary power and water."

17. SECTION 11242 – CHEMICAL METERING PUMPS
    a. On Page 11242-11, delete Paragraph 3.02C.1 in its entirety, and insert the following new Paragraph 3.02C.1 in its place.
       "1. Supply all necessary temporary power and water."

18. SECTION 11243 –DEWATERED CAKE STORAGE BIN
    a. On Page 11243-9:
       i. In Paragraph 2.04C, delete the third sentence starting with "Screw flights shall be a minimum…" in its entirety.
       ii. Delete Paragraph 2.04D in its entirety.
    b. On Page 11243-10:
       i. Delete Paragraph 2.04E.1 in its entirety.
       ii. Delete Paragraph 2.04E.2 in its entirety.
       iii. Delete Paragraph 2.05 and sub-paragraphs in their entirety.
    c. On Page 11243-14, delete Paragraph 3.02C.1 in its entirety, and insert the following new Paragraph 3.02C.1 in its place.
       "1. Supply all necessary temporary power and water."

19. SECTION 11254 – ODOR CONTROL CHEMICAL FEED SYSTEMS
    a. On Page 11254-8, delete Paragraph 3.02C.1 in its entirety, and insert the following new Paragraph 3.02C.1 in its place.
       "1. Supply all necessary temporary power and water."

20. SECTION 11255 – CHEMICAL SCRUBBER ODOR CONTROL SYSTEM
    a. On Page 11255-21, delete Paragraph 3.02C.1 in its entirety, and insert the following new Paragraph 3.02C.1 in its place.
       "1. Supply all necessary temporary power and water."

21. SECTION 11257 – ACTIVATED CARBON ODOR CONTROL SYSTEM
    a. On Page 11257-15, delete Paragraph 3.03D.1 in its entirety, and insert the following new Paragraph 3.03D.1 in its place.
       "1. Supply all necessary temporary power and water."

22. SECTION 11259 – BIOFILTER ODOR CONTROL SYSTEM
    a. On Page 11259-19, delete Paragraph 3.03D.1 in its entirety, and insert the following new Paragraph 3.03D.1 in its place.
       "1. Supply all necessary temporary power and water."

23. SECTION 11265 – OPEN-CHANNEL LOW-PRESSURE/HIGH-INTENSITY ULTRAVIOLET TREATMENT EQUIPMENT
    a. This Section has been reissued. See attached.

24. SECTION 11300 – JET MIXING SYSTEM
    a. On Page 11300-14, delete Paragraph 3.03C.1 in its entirety, and insert the following new Paragraph 3.03C.1 in its place.
       "1. Supply all necessary temporary power and water."

25. SECTION 11301 – DIGESTER, SLUDGE AND FOG STORAGE TANK MIXING SYSTEMS
    a. On Page 11301-13, delete Paragraph 3.02C.1 in its entirety, and insert the following new Paragraph 3.02C.1 in its place.
       "1. Supply all necessary temporary power and water."

26. SECTION 11303 – SUBMERSIBLE SUMP PUMPS
    a. On Page 11303-4:
       i. Delete Paragraph 3.03C.1 in its entirety, and insert the following new Paragraph 3.03C.1 in its place.
          "1. Supply all necessary temporary power and water."
       ii. In the last sentence of Paragraph 3.03E.1, before the words "electric power", insert the word **"temporary".**
       iii. In the last sentence of Paragraph 3.03E.2, before the word "power", insert the word **"temporary".**

27. SECTION 11312 – VERTICAL NON-CLOG WASTEWATER PUMPS (EQ PUMPS)
    a. On Page 11312-12, delete Paragraph 3.03C.1 in its entirety, and insert the following new Paragraph 3.03C.1 in its place.
       "1. Supply all necessary temporary power and water."

28. SECTION 11313 – SELF-PRIMING CENTRIFUGAL PUMPS (NEW WAS PUMPS)
    a. On Page 11313-10, delete Paragraph 3.03C.1 in its entirety, and insert the following new Paragraph 3.03C.1 in its place.
       "1. Supply all necessary temporary power and water."

29. SECTION 11315 – PROGRESSING CAVITY PUMPS
    a. On Page 11315-7:
       i. Delete Paragraph 3.02C.1 in its entirety, and insert the following new Paragraph 3.02C.1 in its place.
          "1. Supply all necessary temporary power and water."

ii. In Paragraph 3.02E.1, delete the words "electric power necessary", and insert the words **"necessary temporary electric power"** in their place.

30. SECTION 11315A – PROGRESSING CAVITY PUMPS (FOR THP ONLY)
    a. On Page 11315A-8, delete Paragraph 3.02C.1 in its entirety, and insert the following new Paragraph 3.02C.1 in its place.
       "1. Supply all necessary temporary power and water."

31. SECTION 11317 – ROTARY LOBE PUMPS
    a. On Page 11317-5, add the following at the end of Paragraph 2.01A:
       "Design FOG Viscosity: 10 centipoise"
    b. On Page 11317-9, delete Paragraph 3.04C.1 in its entirety, and insert the following new Paragraph 3.04C.1 in its place.
       "1. Supply all necessary temporary power and water."

32. SECTION 11318 – DIGESTER RECIRCULATION CHOPPER PUMPS
    a. On Page 11318-11, delete Paragraph 3.02C.1 in its entirety, and insert the following new Paragraph 3.02C.1 in its place.
       "1. Supply all necessary temporary power and water."

33. SECTION 11320 – VORTEX GRIT COLLECTION EQUIPMENT
    a. On Page 11320-10, delete Paragraph 3.04C.1 in its entirety, and insert the following new Paragraph 3.04C.1 in its place.
       "1. Supply all necessary temporary power and water."
    b. On Page 11320-11, in the last sentence of Paragraph 3.04E.2, before the word "power", insert the word **"temporary".**

34. SECTION 11325 – GRIT CLASSIFICATION EQUIPMENT
    a. On Page 11325-10, delete Paragraph 3.03C.1 in its entirety, and insert the following new Paragraph 3.03C.1 in its place.
       "1. Supply all necessary temporary power and water."
    b. On Page 11325-11, in the last sentence of Paragraph 3.03E.2, before the word "power", insert the word **"temporary".**

35. SECTION 11333 – GRINDERS
    a. On Page 11333-8, delete Paragraph 3.02C.1 in its entirety, and insert the following new Paragraph 3.02C.1 in its place.
       "1. Supply all necessary temporary power and water."

36. SECTION 11336 – PRESSURIZED SOLIDS SCREENING SYSTEMS
    a. On Page 11336-9, delete Paragraph 3.02C.1 in its entirety, and insert the following new Paragraph 3.02C.1 in its place.
       "1. Supply all necessary temporary power and water."

37. SECTION 11363 – PRE-DEWATERING CENTRIFUGES
    a. On Page 11363-10, in Paragraph 1.06C.1.c, delete the words "65 percent", and insert the words **"65 to 71 percent"** in their place.
    b. On Page 11363-36, in Paragraph 3.02C, delete the words "electrical shutoffs", and insert the words **"safety disconnect switches"** in their place.
    c. On Page 11363-38, in Paragraph 3.03E.2, before the word "power", insert the word **"temporary".**

38. SECTION 11366 – POST-DEWATERING SCREW PRESSES
    a. This Section has been reissued. See attached.

39. SECTION 11370 – MULTISTAGE CENTRIFUGAL BLOWERS AND ACCESSORIES
    a. On Page 11370-12, in the second sentence of Paragraph 3.02E.4, before the word "power", insert the words **"necessary temporary".**

40. SECTION 11371 – POSITIVE DISPLACEMENT BLOWERS (SCUM AERATION)
    a. On Page 11371-13, delete Paragraph 3.03C.1 in its entirety, and insert the following new Paragraph 3.03C.1 in its place.
    "1. Supply all necessary temporary power and water."

41. SECTION 11373 – COMPRESSED AIR SYSTEM AND APPURTENANCES (THERMAL HYDROLYSIS SYSTEM)
    a. On Page 11373-7, in the last sentence of Paragraph 3.03E.1, before the word "power", insert the words **"necessary temporary".**

42. SECTION 11398 – GAS ENGINE GENERATOR AND ACCESSORIES
    a. On Page 11398-19, delete Paragraph 2.06A.11 in its entirety, and insert the following new Paragraph 2.06A.11 in its place.
    "11. The HRSG/silencer shall be Model HRSG-46-15-2.0 by Cannon Boiler Works, Inc., or approved equal."

43. SECTION 13120 – PRE-ENGINEERED WEATHER CANOPY
    a. On Page 13120-7:
        i. Delete Paragraph 2.04F.1 in its entirety, and insert the following new Paragraph 2.04F.1 in its place.
        "1. Primary structural steel shall be field coated with Ferrous Metal Nonsubmerged (exterior) coating system including primer as specified in Section 09902. Manufacturer's standard prime coating will be acceptable if written acceptance of the primer is provided by the finish paint manufacturer confirming acceptance of the primer system."
        ii. Delete Paragraph 2.04F.2 in its entirety, and insert the following new Paragraph 2.04F.2 in its place.
        "2. Secondary structural steel shall be G30 acrylic coated galvanized finish."

44. SECTION 13205 – WIRE WRAPPED PRESTRESSED CONCRETE TANKS

a. On Page 13205-10, delete Paragraph 2.02G.8.b and sub-paragraphs in their entirety, and insert the following Paragraphs 2.02G.8.b and 2.02G.8.b.1 in its place.

"b. The digester tank roof shall be insulated by a spray polyurethane foam (PUF) as specified in Section 07545. A fluid-applied elastomeric roof coating shall be applied over the PUF as specified in Section 07540. The roof insulation comprises the PUF and elastomeric roof coating.

"1) Tank manufacturer is responsible for the coordination and installation of the roof insulation system."

45. SECTION 13236 – FOG HEAT EXCHANGERS

a. On Page 13236-10, delete Paragraph 3.01D.1 in its entirety, and insert the following new Paragraph 3.01D.1 in its place.

"1. Supply all necessary temporary power and water."

46. SECTION 13240 – DIGESTER GAS TREATMENT SYSTEM

a. On Page 13240-11, insert the following new Paragraph 2.03.C.1.e.

"e. Digester gas blowers shall not exceed 80 dbA at a three foot radius from the compressor. Noise enclosures and inlet silencers shall be provided as a mitigation method to achieve the 80 dbA requirement."

47. SECTION 13300 – INSTRUMENTATION AND CONTROLS – GENERAL PROVISIONS

a. On Page 13300-2, in Paragraph 1.01B.7.b:
   i. In the first sentence, delete the word "plant", and insert the word **"WRF"** in its place.
   ii. Delete the second sentence in its entirety.

48. SECTION 13305 – INSTRUMENTATION AND CONTROLS – CONTROL DESCRIPTIONS

a. On Page 13305-37:
   i. In the third sentence of Paragraph 3.03K.1:
      1. After the words "(Loop 1850)", insert the words **"via a tap on the sludge feed piping on the first floor of the Solids Processing Building,".**
      2. Delete the words "mixing valve and flocculation piping assembly that sits on the floor alongside each screw press", and insert the words **"and flocculation tank located upstream of each screw press".**
   ii. Delete Paragraph 3.03K.2 (the line "Loop 7005, 7035, 7040: Post-Dewatering Screw Press Feed Pumps and Dilution Water") in its entirety, and insert the following Paragraph 3.03K.2 in its place.

"2. Loop 7005, 7007, 7035, 7040: Post-Dewatering Screw Press Feed Pumps, Flocculation, and Dilution Water"

b. On Page 13305-38:
   i. Insert the following new Paragraph 3.03K.2.a.(12)(i).

"i) Flocculation Tank Pressure"

ii. Delete Paragraph 3.03K.2.b.(9) in its entirety, and insert the following Paragraph 3.03K.2.b.(9) in its place.
"9) Pump Hand/Off/Auto"

iii. Insert the following new Paragraphs 3.03K.2.b.(13) through 3.03K.2.b.(18).
"13) Flocculation Tank Pressure
14) Flocculation Mixer Running (each tank)
15) Flocculation Mixer Fault (each tank)
16) Flocculation Mixer In Remote (each tank)
17) Flocculation Mixer Speed (each tank)
18) Flocculation Mixer H/O/A (each tank)"

c. On Page 13305-39:
   i. In Paragraph 3.03K.2.c.(3), after the words "The screw press Main Control Panel calculates the required Post-Dewatering Screw Press Feed Pump flow setpoint (gallons per minute)", insert the words **", the required polymer feed pump flow setpoint (gallons per minute),".**
   ii. In the first sentence of Paragraph 3.03K.2.d.(4). In the first sentence, delete the word "Pre-Dewatering", and insert the word **"Post-Dewatering"** in its place.

49. SECTION 13306 – INSTRUMENTATION AND CONTROLS – APPLICATIONS ENGINEERING SERVICES
   a. On Page 13306-8, delete Paragraph 3.04A.1 in its entirety.
   b. On Page 13306-10:
      i. Delete Paragraph 3.05 and sub-paragraphs in their entirety.
      ii. Delete Paragraph 3.06A.1 in its entirety.
      iii. Delete Paragraph 3.06A.2 in its entirety.
      iv. Delete Paragraph 3.06B.4 in its entirety.
   c. On Page 13306-11:
      i. Delete Paragraph 3.06B.5 in its entirety.
      ii. Delete Paragraph 3.06B.6 in its entirety.
   d. On Page 13306-12:
      i. Insert the following new Paragraph 3.09A.2.c.
      "c. Secondary – Internet Client"
      ii. Delete Paragraph 3.09A.3 and sub-paragraphs in their entirety.

50. SECTION 13315 – HMI SYSTEM SOFTWARE
   a. On Page 13315-14:
      i. In Paragraph 3.02A.1.a, delete the words "(Upgrade existing license to latest version of VTSCADA)".
      ii. In Paragraph 3.02A.1.d, delete the words "(Upgrade existing license)".

51. SECTION 15066 – MILL GRADE STAINLESS STEEL PIPE, FITTINGS AND SPECIALS
   a. This Section has been reissued. See attached.

52. SECTION 15072 – DUCTILE IRON PIPE AND FITTINGS
   a. On Page 15072-7, in Paragraph 3.01E, after the words "wall pipes", insert the words **"for pressure pipe".**

53. SECTION 15100 – VALVES AND APPURTENANCES

a. On Page 15100-32, insert the following Paragraphs 2.04V, 2.04W, 2.04X, and 2.04Y and sub-paragraphs.

"V. Butterfly Valves – Stainless Steel Construction

1. Type: High performance wafer type designed for bubble tight shutoff and throttling control.

2. Construction:

a. Body, Disc, Shaft, Gland, Screws, Bearings: 316 stainless steel.

b. Seat, Gasket, Packing: PTFE.

c. Control Ring: Titanium.

d. Bearings: PTFE/317 stainless steel.

e. ANSI Class Rating: 150 or as required by the process, whichever is greater.

3. Actuator:

a. 2-inch through 4-inch: Manual handlever, unless an electric motor actuator is required.

b. 6-inch and larger: Manual gear with handwheel, unless an electric motor actuator required.

4. Manufacturer:

a. De Zurik.

b. Pratt."

W. Gate Valves, 2-1/2-Inch and Smaller – Stainless Steel Pipe Service:

1. Type: Rising stem with solid wedge, integral seat and threaded bonnet.

2. Construction:

a. Body and Bonnet: 316 stainless steel.

b. Wedges and Trim: 316 stainless steel.

c. Packing: Teflon.

d. Ends: Threaded.

e. Actuator: Manual handwheel, unless an electric motor actuator is required.

3. Manufacturer:

a. Powell.

b. Walworth."

X. Ball Valves, Stainless Steel Construction:

1. Type: Standard ball valve with circular port, and top entry to ball.

a. Construction:

1) Body: 316 stainless steel.

2) Ball: 316 stainless steel.

3) Stem: 316 stainless steel.

4) Seat: Reinforced TFE.

5) Seals: TFE.

6) Ends: Threaded or Flanged, Class 150.

7) Actuator: Manual handlever or handwheel with gearing, unless an electric motor actuator is required.

b. Manufacturer:

1) ITT Engineered Valves.
2) McCanna."

Y. Check Valves, Stainless Steel Construction:
1. Type: Horizontal swing check valve, top entry.
2. Body: Disc, Nut, Pin, Cover: 316 stainless steel.
3. Gasket: Teflon.
4. Ends: Threaded or flanged as required.
5. Compressed Air Service: Provide lift check type, 300 psig rated valves.
6. Manufacturer:
a. Crane.
b. Sharpe Valves."

54. SECTION 15556 – HIGH PRESSURE STEAM BOILER AND STEAM SYSTEM EQUIPMENT

a. On Page 15556-23, insert the following new Paragraph 2.03 and sub-paragraphs, and re-number subsequent paragraphs accordingly.

"2.03 EMERGENCY AUTOMATIC BOILER FEEDWATER INJECTOR

A. General

1. Provide one, emergency, automatic, boiler feedwater injector for each boiler. Injectors shall be manually operated to provide high pressure, heated and treated water to the boilers. These injectors are intended to operate as an emergency back-up in the event of a deaerator and boiler feed pump failure. Installation shall include, but not be limited to the following items:

a. Chemical lines
b. Automatic injector
c. High pressure steam lines
d. Protected water lines
e. Overflow drain lines
f. Make-up boiler feedwater line
g. Isolation, pressure reducing and check valves as shown on the drawings and required.
h. Pipe accessories such as strainers, thermometers and pressure gauges, with pet cocks, where shown on the drawings and as required.

2. The automatic, boiler feedwater injector shall be of all bronze construction and equal to: Penberthy, High-pressure Injector; Size No. BB-330. Injector shall have ¾" connections for inlet and discharge water, overflow drain and steam."

55. APPENDIX B-1 – SCOPE OF SUPPLY FOR UV DISINFECTION SYSTEM BY TROJANUV

a. Delete the Scope of Supply dated June 24, 2013, in its entirety, and insert the attached updated Scope of Supply dated December 2017 in its place.

III. ON THE DRAWINGS

1. DRAWING C-32 – GRADING AND DRAINAGE PLAN – PANEL 5
   a. This Drawing has been reissued. See attached.

2. DRAWING S-31 – UV STRUCTURE FOUNDATION AND TOP PLAN
   DRAWING S-32 – UV STRUCTURE SECTIONS
   DRAWING S-33 – UV STRUCTURE DETAILS
   DRAWING S-59 – DIGESTER BUILDING FOUNDATION PLAN
   DRAWING S-60 – DIGESTER BUILDING FLOOR PLAN
   a. These five Drawings have been reissued. See attached.

3. DRAWING M-38 – UV INFLUENT AND EFFLUENT DIVERSION BOXES – PLANS AND SECTIONS
   a. At the UV Influent Diversion Box Plan and Section 1, delete the word "(RJ)" from each callout for the 60" pipe coupling (typical two places).

4. DRAWING M-39 – NEW UV DISINFECTION SYSTEM PLAN
   DRAWING M-40 – NEW UV DISINFECTION SYSTEM SECTIONS
   a. These two Drawings have been reissued. See attached.

5. DRAWING M-79 – DIGESTER BUILDING ENLARGED PLAN III
   a. Insert the emergency automatic boiler feedwater injector shown on Sketch SK-M79-1, attached.

6. DRAWING M-82 – DIGESTER BUILDING SECTIONS III
   a. Insert the plant water (PLW) piping as shown on Sketch SK-M82-1, attached.

7. DRAWING M-84 – DIGESTER NO.1 AND NO. 2 COVER PLAN
   a. Change the 6" PV shown at Coordinate A-1 to a **6" BFV-SST.**

8. DRAWING M-90 – MISCELLANEOUS PLANS AND DETAIL
   a. In Detail B:
      i. In the table, revise the words "SS GAS PIPE" to read **"SS DIGESTER GAS PIPE".**
      ii. Delete Note 3 in its entirety, and insert the following new Note 3 in its place. **"ANY PIPES SMALLER THAN 4-INCH DIAMETER SHOULD FOLLOW THE 4" DI SLUDGE PIPE SUPPORT DETAILS LISTED IN THE TABLE BELOW, EXCEPT FOR ½" NG-CS, WHICH SHALL BE SUPPORTED AT A MAXIMUM SPACING OF 7'-0"."**

9. DRAWING M-97 – SCUM HOLDING TANKS – PLAN AND SECTION
   DRAWING M-98 – SCUM HOLDING TANKS – SECTIONS
   a. On both Drawings, delete Note 2 in its entirety, and insert the following new Note 2 in its place (typical two places).
      "2. CONFIRM SUBGRADE BEARING ELEVATION IS SUITABLE FOR 1300

PSF BEARING PRESSURE PRIOR TO PLACING STRUCTURE. STRUCTURE HAS BEEN DESIGNED CONSIDERING NET-UNLOADING OF NATIVE SOILS AT THE BEARING ELEVATION."

10. DRAWING MD-7 – GATE & WEIR SCHEDULES & MISCELLANEOUS DETAILS
    a. In the Gate Schedule, in the two rows for the UV Channel No. 1 and UV Channel No. 2 Influent gates:
        i. In the Gate No. column, revise the gate numbers from SG-810-1 and SG-810-2 to **SU-810-1 and SU-810-2,** respectively.
        ii. In the Mount column, insert the words **"(SEE NOTE)"** after the word "EMBEDDED" (typical two places).
        iii. In the Dimensions columns:
            1. Revise Dimension "W" from 4'-9 ½" to **5'-0".**
            2. Revise Dimension "H" from 9'-2" to **4'-6".**
            3. Revise Dimension "C" from 1'-0" to **4'-7 ½".**
    b. At the bottom of the Gate Schedule, insert the following note.
    "NOTE: GATE TO BE SUPPLIED WITH EMBEDDED GUIDES AND FACE-MOUNTED TOP AND BOTTOM SEALS."

11. DRAWING MD-17 – MISCELLANEOUS DETAILS
    a. Insert Detail F on Sketch SK-MD17-2, attached.

12. DRAWING E-28 – MCC-5 ONE LINE POWER DIAGRAM (CONTINUED)
    a. At the Post Dewatering Screw Press Control Panel CP-7010-1, in Addendum No. 10, a 2 HP motor identified as "FLOCCULATION TANK AGITATOR" was added. Change the motor from 2 HP to **3 HP.** The feeder remains unchanged.
    b. At the Post Dewatering Screw Press Control Panel CP-7010-1, add a **1/2 HP motor** and identify it as **"SPRAY WASH DRIVE".** Add a **feeder from CP-7010-1 to the 1/2 HP motor** and identify it as **"CP70101-1E: 3/4"C., 3#12, 1 #12G".**
    c. At the Future Post Dewatering Screw Press Control Panel CP-7010-3, in Addendum No. 10, a future 2 HP motor identified as "FLOCCULATION TANK AGITATOR" was added. Change the motor from 2 HP to **3 HP.** The feeder remains unchanged.

13. DRAWING E-31 – MCC-6 ONE LINE POWER DIAGRAM (CONTINUED)
    a. At the Post Dewatering Screw Press Control Panel CP-7010-2, in Addendum No. 10, a 2 HP motor identified as "FLOCCULATION TANK AGITATOR" was added. Change the motor from 2 HP to **3 HP.** The feeder remains unchanged.
    b. At the Post Dewatering Screw Press Control Panel CP-7010-2, add a **1/2 HP motor** and identify it as **"SPRAY WASH DRIVE".** Add a **feeder from CP-7010-2 to the 1/2 HP motor** and identify it as **"CP70102-1F: 3/4"C., 3#12, 1 #12G".**

14. DRAWING E-38 – PP-FB-1 ONE LINE POWER DIAGRAM
    DRAWING E-39 – PP-FB-2 AND PP-AL ONE LINE POWER DIAGRAM
    DRAWING E-56 – INSTRUMENTATION AND CONTROL RISER DIAGRAM
    DRAWING E-71 – UV SYSTEM POWER PLAN
    a. These four Drawings have been reissued. See attached.

15. DRAWING E-93 – SOLIDS PROCESSING BUILDING SECOND FLOOR PLAN 1 POWER PLAN
    a. At the west end of Post Dewatering Screw Press No. 1 SP-7010-1, next to the screw press drive motor, add a **motor symbol** and identify it as **"SPRAY WASH DRIVE".**
    b. At the west end of Post Dewatering Screw Press No. 2 SP-7010-2, next to the screw press drive motor, add a **motor symbol** and identify it as **"SPRAY WASH DRIVE".**
    c. At the west end of Future Post Dewatering Screw Press No. 3 SP-7010-3, next to the screw press drive motor, add a **future motor symbol** and identify it as **"SPRAY WASH DRIVE (FUTURE)".**

16. DRAWING E-115 – PANELBOARD SCHEDULES I
    a. In the schedule for Panelboard LP-UV, for circuit number #17, add the description **"LE/LIT-815-1",** in the load column add **"0.1",** and in the notes column add **"5".**
    b. In the schedule for Panelboard LP-UV, for circuit number #19, add the description **"LE/LIT-815-2",** in the load column add **"0.1",** and in the notes column add **"5".**

17. DRAWING I-3 – SYSTEM ARCHITECTURE – WATER RECLAMATION FACILITY
    DRAWING I-22 – PROCESS AND INSTRUMENTATION DIAGRAM – UV DISINFECTION
    a. These two Drawings have been reissued. See attached.

18. DRAWING I-33 – PROCESS AND INSTRUMENTATION DIAGRAM – CHP SYSTEM – AUXILIARY BOILERS
    a. Insert the emergency automatic boiler feedwater injector shown on Sketch SK-I33-1, attached.

19. DRAWING I-47 – PROCESS AND INSTRUMENTATION DIAGRAM – DIGESTER GAS SYSTEM (1 OF 3)
    a. In the title of this Drawing, delete the words "(1 OF 2)", and insert the words **"(1 OF 3)"** in their place.

20. DRAWING I-48 – PROCESS AND INSTRUMENTATION DIAGRAM – DIGESTER GAS SYSTEM (2 OF 3)
    a. This Drawing has been renamed and reissued. See attached.

21. DRAWING I-48A – PROCESS AND INSTRUMENTATION DIAGRAM – DIGESTER GAS SYSTEM (3 OF 3)
    a. Insert this new Drawing, attached.

IV. REQUESTS FOR INFORMATION AND RESPONSES

(Not to be included within the Contract Documents)

1. Request: Please reference drawings M-88 and M-90: What is the maximum spacing to be used for the 1/2" NG-CS line routing to the hydrogen sulfide removal system? 15'-0" appears to be too wide a spacing for a small diameter line.

   Response: The maximum 15'-0" spacing for the pipe supports shown in Detail B on Drawing M-90 is for the DG-SST pipe. The natural gas pipe is routed along-side and should be supported every 7'-0". Refer to the clarifications of Drawing M-90 in this Addendum.

2. Regarding Specification Sections 11398 and 13240:

   a. Request: Section 13240/3.03/D/3 – Functional Testing, please remove "Oil" and "Particulate" testing from the raw and treated gas testing requirement as the blower is an oil-less product. Specific testing requirements are not provided in Section 01665, can you please specify the lab and test protocol?

      Response: Oil and particulate testing of the raw and treated gas will remain.

   b. Request: Section 13240/3.03/D/5 – Unison Solutions highly recommends that VOCs be added to the table in 1.07B, as the system manufacturer is required to test for these in the functional testing. If none are listed, we must assume there will be "0" VOCs in the raw gas. Therefore, the raw gas will be out of spec and owner will not meet the conditions of table 1.07B.

      Response: This has been addressed in the reissued Specification Section 13240 in Addendum No. 10. VOCs are not included in the characteristics of untreated biogas or in the performance requirements of the treated biogas. Additionally, a minimum time requirement between media changeouts has been removed, and vessel sizes specified in their place. Paragraph 3.03D.5 does require testing of VOCs to get a full picture of the treatment achieved by the system.

3. Request: Since Megalug type restraint will only be allowed on a case by case basis, will you require a positive MJ restraint such as U.S. Pipe's Bolt Lok on buried MJ valves?

   Response: Restrained joint pipe, in general, shall conform to Section 02616, Paragraph 2.03C. Please refer to the clarification of this paragraph in this Addendum.

4. Request: Spec 15072-7, 3.01.E, states "Sleeves and wall pipes shall have thrust collar located at the mid-depth of wall." Spec 01170-1 requires a 2" high collar to be welded to wall pipes with no mention of thrust collar. Do wall pipes require a welded wall collar or are you requiring a special collar rated for thrust which will require an additional charge and special fabrication?

   Response: Standard wall pipes have a rated thrust that is usually found in the manufacturer's catalog. Please refer to the clarification of Section 15072, Paragraph 3.01E, in this Addendum.

5. Request: Please clarify what restraint is to be used to restrain buried 60" RJ couplings shown on drawing M-38. Spec 02616 requires couplings to be Dresser Style 38. I do not believe a 60" self-restrained coupling is available. Also, buried couplings can't be restrained by using M11 method because lugs can't be welded to DI or can't be tie rodded to flanges since it is buried. Please provide detail or spec for the restraint of the 60" RJ coupling.

   Response: Restraint of the 60" pipe couplings shown on Drawing M-38 is not required. Refer to the changes to Drawing M-38 in this Addendum.

6. Request: Specification 13205, Section 2.02 G.8.b, requires roof insulation on the digester tanks. How flexible are the Johns Manville insulation panels? Will we be able to install these panels on a 1/10 the rise dome without creating any gaps between the dome and panels?

   Response: The roof insulation on the digester tanks has been changed to a spray foam system. See this Addendum for changes to Section 13205 and new Sections 07540 and 07545.

7. Comments and questions from Flottweg Separation Technology regarding Specification Section 11363 (Pre-Dewatering Centrifuges).

   a. Request: Section 11363, 2.10.D.1.c – Remote starting of the equipment is considered unsafe and is not included in our scope.

      Response: We have completed several centrifuge projects where the plant operations staff has the option to start the centrifuges locally, or to start them remotely from the plant SCADA system. This option will remain in the specification. Before personnel begin working on a centrifuge, it should be locked out so that it cannot start. Any safety concerns should be addressed in the operation and maintenance documentation.

   b. Request: Section 11363, 2.10.J – Due to safety concerns, jog control for each motor will not be supplied.

      Response: We have completed centrifuge projects where jog control was provided. The requirement for jog control will remain in the specification. Any safety concerns should be addressed in the O&M documentation.

   c. Request: Section 11363, 2.10.P.8 – Remote starting of the centrifuge is not permitted and is not included.

      Response: Refer to the response to Item IV.7.a above.

   d. Request: Section 11363, 2.10.P.9 – Remote shutdown of the centrifuge is not recommended but can be provided.

      Response: This question appears to allude to a remote emergency shutdown. The remote shutdown command starts the shutdown sequence, not an emergency shutdown. The requirement for remote shutdown will remain in the specification.

   e. Request: Section 11363, 3.02.C – Local motor shutoffs are unsafe while machine is operating and will not be supplied. Main panel should be locked out / tagged out for maintenance.

Response: Local disconnecting means (safety disconnect switches) are provided in the one line power diagrams and plans, as required by the National Electrical Code, to disconnect the power supply to the motors. These switches are used to take the motor out of service the motor for maintenance, with lockout/tagout procedures. The safety disconnect switch is not used as a local ON/OFF switch for controlling the motor. If a motor is shut down, then the centrifuge should not be able to be started in the control logic. Any safety concerns should be addressed in the O&M documentation. Refer to the clarification of Section 11363 in this addendum.

8. Comments and questions from Huber Technology, Inc., regarding Section 11366 (Post-Dewatering Screw Presses).

Requests:

- Reference Drawing M-57. Drawings show old Screw Press 800 model. Please replace screw press with the attached updated Q-Press 800.2 drawings.
- Reference Section 11366 2.02 B. Section details the previous generation model Ros3Q 800 screw press. Please replace with attached specification for the current model Q-Press 800.2 unit.

Response: Due to the timing of this request, it is not possible to make changes to the Drawings. The unit shown on the Drawings will remain. Please refer to revisions to Drawings M-57, M-63, and M-64 in Addendum No. 10 and to the reissued Section 11366 in this Addendum.

9. Request: On drawing I-49 & 53 you call out "Screw Press Main Control Panel" who provides this PLC? I don't see it on the System Architecture drawing on I-3?

Response: The PLC for the Screw Press Main Control Panel is part of the screw press manufacturer's scope of supply per Section 11366.

10. Request: The hopper will be difficult to manufacture as described in the spec 11243 and drawn in M-54.
    a. Spec states that a shafted screw with outboard pillow block bearings shall be utilized. Drawing M-54 does not show these at either "A" or "B" locations. We understand the drawing may only be a representation. It is possible to put these bearings at the drive end "B". Putting these bearings at drive end "A" is NOT possible.
    b. The sludge has to flow thru the trough where the bearing would be located. The trough should be closed from the live bottom screw to the vertical instead of open at "C".
    c. A few ideas to consider:
        i. Eliminate the vertical screw and put the shaft bearing external to the discharge chute (that previously was used to house the vertical screw). Best solution.
        ii. Use pushing shaftless screw live bottoms instead of shafted. A good solution, but hold down bars internal to the hopper would be required.
        iii. Use a hanger bearing (not allowed by current spec) to hold up shaft near "A". This option is least attractive as the hanger bearing will be 100% covered in sludge.

Response: The pre-dewatered cake bin is in the scope of supply of the THP System Supplier per Section 11351. The drawing was provided by the pre-selected THP System Supplier, which intends to use a vertical screw to feed the progressing cavity pumps. The configuration shown in the drawing requires a shaftless screw live bottom hopper. Section 11243 has been modified via this Addendum to remove language indicating a shafted screw live bottom.

11. Request: Disinfection System drawing E-71: Note-5, what is the fiber count from PLC to HSC.

    Response: Per TrojanUV, the connection from the HSCs to the SCC is not fiber optic cable; instead, it is "One (1) serial communication link, Modbus, consisting of one (1) 3 conductor shielded cable, 18 gauge maximum from the SCC and HSC and other PDCs (daisy chained)." Refer to the updated TrojanUV Scope of Supply included in this Addendum.

12. Request: The specifications indicate the contractor is responsible for monthly power costs until Substantial Completion is achieved. Please provide any available information that indicates the typical current monthly power costs the Owner is paying.

    Response: The intent is that the Contractor will be responsible for power costs associated with any temporary systems and facilities, and the Owner will be responsible for power costs associated with any permanent systems and facilities. Permanent systems and facilities include equipment, HVAC systems, other mechanical systems, and lighting that is powered through permanent panels. Temporary systems and facilities would include the Contractor's trailers, temporary lighting, temporary HVAC systems, temporary bypass pumping systems, and other temporary systems and facilities required in the performance of the Contractor's work. Modifications have been made in this Addendum to the Specifications to make the requirements align with this intent.

13. Request: Sheet No. C-50 includes P1 Profile – Plant Drain Line "A", which indicates proposed Manholes MH A-6 and MH A-7 are to be PVC Lined. Please confirm these two manholes are to include PVC Lining, and provide applicable specifications for the lining.

    Response: Confirmed; PVC lining is to be included. Please refer to the changes to Section 02605 and the new Section 09960 in this Addendum.

14. Request: There are several stainless steel Ball Valves shown on the drawing M-68,69 at the FOG System, and numerous other Ball Valve on the hot water loops. Section 15100, Paragraph 2.04.E calls for brass ball valves, which are typically for small diameter ball valves. Shall we provide stainless steel ball valves as indicated and for any valve 3" and larger? Is there a stainless steel ball valve specification that we should follow?

    Response: Stainless steel ball valves shall be provided as shown on the Drawings. Specifications for stainless steel ball valves have been added to Section 15100 via this Addendum.

15. Request: Plan sheet M-68 and M-69 show four (4) 2" stainless steel gate valves for the Wash Hose Station isolation. Are the gate valves and check valves at the FOG Feed Pump also to be stainless steel? Please provide specifications for stainless steel gate valves and possibly stainless steel check valves for the FOG system.

    Response: Yes, the gate valves and check valves at the FOG Feed Pumps are also to be stainless steel. Specifications for stainless steel gate and check valves have been added to Section 15100 via this Addendum.

16. Request: Drawing M-84 and M-85 show six (6) 6" stainless steel butterfly valves for the Digester Gas lines on top of the covers. Butterfly Valves are not recommended for digester gas lines as the pressure can buildup and open the valves. We suggest stainless plug valves with gear operators.

    Response: Bubble tight stainless steel butterfly valves shall be provided where shown on digester gas piping. Specifications for stainless steel bubble tight butterfly valves have been added to Section 15100 via this Addendum.

17. Request: Drawing M-84 also shows a plug valve on the Digester Gas line from the covers to the gas system. We recommend this to be a stainless steel plug valve since cast iron plug valves will corrode in digester gas applications.

    Response: This plug valve has been changed to a stainless steel bubble tight butterfly valve in this Addendum.

18. Request: Drawing M-84 and M-85 call for stainless steel ball valves at the Digester Stand Pipe and the Digester Gas Sampling Panel. Please provide stainless steel ball valve specification or advise if these should be stainless steel plug valves.

    Response: These are to be stainless steel ball valves. Specifications for stainless steel ball valves have been added to Section 15100 via this Addendum.

19. Request: Has an asbestos and lead paint survey been conducted for structures that are scheduled for demolition? Do any known environmental/hazardous conditions currently exist at the site?

    Response: An asbestos and lead paint survey has not been conducted. Refer to Section 02050, reissued in this Addendum.

20. Requests regarding Section 15066 (Mill Grade Stainless Steel Pipe and Fittings).

    a. Request: Specification Section 15066 only addresses requirements for stainless steel pipe used on Low Pressure Air lines. Please provide a schedule outlining whether the pipe is grade 304L or 316L and the wall thickness, for the following services: Pre-Dewatering Sludge Cake, Digester Gas, CHP Hot Water Loop, Foul Air, Overflow, Plant Reuse Water, Fats Oils and Grease, Vent, Condensate, Hydrolyzed Sludge, Hot Water, and Digested Sludge.
    b. Request: Please confirm that Grade 316L Schedule 40 Stainless Steel Pipe is required for all stainless steel pipe systems that are not included in Specification Section 15066.

    Response: Please refer to the reissued Section 15066 in this Addendum.

21. Request: Note 2 on sheet M-97 states to refer to the geotechnical design recommendation in appendix A of the specifications. No data was provided in appendix A with regard to the scum holding tanks.

    Response: Please refer to the changes to Drawings M-97 and M-98 in this Addendum.

22. Request: Sheet P-11 depicts the 4" PW line that is also depicted on sheet C-22. There is also a 6" PLW line depicted on sheet C-22 that is routed to the digester building. This line is not depicted on sheet P-11 or sheet M-78. Please provide a section depicting where this pipe enters the digester building.

    Response: The 6” PLW splits into two 4” PLW lines on Drawing C-22. One 4” PLW line enters the Digester Building through the floor slab and rises vertically to a tee. The 4” PLW-TEE has BFVs on each side of its runs, as shown on Drawing M-78 at Coordinate H-3. See Sketch SK-M82-1, issued in this Addendum, for a section view.

23. Request: 11265-3.02.J: Per this specification, removal of the existing UV Equipment cannot begin until after the new UV System is tested per 3.06.A. Per 3.06.A, in order for Owner acceptance, the new UV must meet the performance requirements during the preliminary performance testing specified herein. 3.04.H lists the Preliminary Performance Tests, which include 3.04.H.5, which is a Six-Month Trial Period. Please clarify if completion of the six-month trial period is a part of the Preliminary Performance Testing required prior to demolition of the existing UV.

    Response: Completion of the six-month trial period specified in Section 11265, Paragraph 3.04H.5 is required prior to demolition of the existing UV system.

24. Request: 11265-3.04.I.1.a: Routine Effluent Quality Test for UV (12 mos) – Is successful completion of this test a requirement of Contract Final Completion?

    Response: Successful completion of the 12-month Routine Effluent Quality Test is a requirement of Contract Final Completion.

25. Request: On the Bid Form, page 00300-22, it states: "Date of Qualification to do business in_____ Tennessee is ____/___/_____". What goes in the first blank before Tennessee?

    Response: The line should read, "Date of Qualification to do business in State of Tennessee is ____/___/_____". It has been revised (and the first blank has been eliminated) in the reissued Bid Form included in this Addendum.

26. Request: From C2i: In order to write up FAT and FDT procedures control descriptions are required. The contract documents do not contain any control descriptions for the existing PLC logic. Are these available?

    Response: Control descriptions for the existing PLC logic are not available.

27. Request: From C2i: Are there any documented PLC programs available for the existing PLC's that the integrator is to replace?

    Response: The Owner will make the programs available to the successful bidder. Programs may be downloaded from the PLCs. There is also hard copy documentation of the programs for PLC-1, 2, 3, 4, 6, and 7, and the Wonderware InTouch database.

28. Request: From C2i: Is the development application program for the Maple OIT that requires program modification available?

    Response: No, it is not available.

29. Request: From C2i: Is the integrator required to integrate the Water Plant and Collection System VTSCADA Applications?

    Response: No. This requirement is being removed from the contract. Refer to the changes to Sections 13300 and 13306 in this Addendum.

30. Request: From C2i: 13300-1.01.B.9 – MOPO Plan. This is an extensive amount of work. Please confirm this is still required.

    Response: Confirmed; it is required. Proper planning is absolutely necessary to maintaining plant operation during the replacement of controls.

31. Request: From C2i: Additional I/O points are being added to the existing PLCs that are to be replaced. It is difficult to determine based on the I drawings (what is bold and what is not) what is new I/O and what is existing I/O that will be replaced. Can an I/O list be provided of the new points to be added to the existing PLCs?

    Response: It is not possible to provide an I/O list. However, the I/O points are shaded according to whether they are new (black) or existing (gray). The Owner has existing panel drawings that will be made available to the successful bidder.

32. Request: Addendum No. 10, Article II.23.ii., indicates the Max. Internal Pressure is "n/a". Section 13212, Article B., indicates a pressure relief hatch is required. With the above item in Addendum No. 10, is a pressure relief hatch no longer required. If the hatch is still required, some level of internal pressure is expected, and the Bidders need to know this pressure. Please provide clarification to this issue.

    Response: The design intent is for the Digested Biosolids Storage Tank to operate at atmospheric pressure during normal operation. However, the tank is also designed to receive overflows that may occur due to a rapid rise event in the anaerobic digesters. Therefore, the pressure relief hatch is still required; it should be provided with the pressure setting range specified in Section 13212, Paragraph 2.03B.4.

33. I looked at the Addendum 10 and on pg 9 and 10 regarding the flow meters Section 13340 I have the below comments:

    a. Request: For FE/FIT 4000-1: missing Temp parameters shall I assume it is the same as FE/FIT4500-2 Temp low/norm/high 50/80/100

        Response: Temperature parameters for the natural gas are not available.

    b. Request: For FE/FIT 4000-1: flow range of 0-70cfm and low,norm,high flow of 5,80-55,70SCFM is different then my calculation. I calculated using assumed temperature of 50/80/100F, Max flow at 50F and 5psig I got 97.5SCFM

        Response: FE/FIT 4500-1 measures the natural gas flow to the boilers. It has a range of 0 to 70 cfm. The minimum flow, normal flow range, and maximum flow to the boilers is 5 scfm, 20 to 55 scfm, and 70 scfm, respectively. This flow was not based on temperature, but on the boilers' fuel demand (BTU/hr) and turndown ratios.

    c. Request: For FE/FIT 4500-2: flow range of 0-1520 CFM and low,norm,high flow of 20,30-90,120SCFM is different then my calculation. I calculated using given temperature of 50/80/100F and pressure of 5 psig, Max flow at 50F and 5psig I got 2116.59 SCFM

        Response: FE/FIT 4500-2 measures the biogas flow to the boilers. It has a range of 0 to 1,520 cfm. The minimum flow, normal flow range, and maximum flow to the boilers is 20 scfm, 30 to 90 scfm, and 120 scfm, respectively. This flow was not based on temperature, but on the boilers' fuel demand (BTU/hr) and turndown ratios.

    d. Request: Was FE/FIT6310 deleted? It was on the original and it is not on the addendum.

        Response: Yes, this meter was deleted. Meter 4500-2 measures the biogas flow to the boilers; this meter was redundant and not needed.

34. Request: [Pre-engineered metal building] steel will be delivered with an alkyd shop primer; what painting specification will be required? 09902 2.03 L allows for a tie-coat; 2.03 B does not. This would apply to the canopies.

    Response: Primary steel shall be coated in accordance with Ferrous Metal Nonsubmerged (exterior) coating system including coordination of a compatible primer with the finish

system. Secondary steel shall be galvanized. Refer to the changes to Section 13120 in this Addendum.

35. Request: Specification Section 14360 - Overhead Bridge Crane - Pages 13 and 14 indicate double girder bridges for the Pre-Dewatering Room Bridge Crane and the Post-Dewatering Room Bridge Crane. The drawings indicate a single girder bridge. Please clarify which is correct.

    Response: The double girder bridges specified in Section 14630 are correct.

36. Request: In Addendum #9, Item 28 references a revised Drawing AD-4 that doesn't seem to be attached. Please provide.

    Response: Item IV.28 in Addendum No. 9 does not refer to an attached drawing. It references the changes to Drawing AD-4 described in Item III.5 of the same Addendum.

37. Request: With regard to the American Iron & Steel (AIS) requirements applicable to the subject Franklin, TN treatment plant project, please understand that we plan to quote and eventually furnish all ductile iron pipe and fittings for this job in accordance with those requirements; however, there are some products, specifically fittings, that we understand are only available from non-domestic sources that must be included in our quotations. These are relatively small in number for the bill of material anticipated. Considering this situation, will these products be accepted for installation?

    Response: No. Only iron and steel fittings manufactured in America with American steel will be accepted on this project.

38. Request: Carpenters, cement finishers, and pipefitters will fall within the Category with "electricians" as determined by Davis Bacon requirements under HEAVY Wage Determination (TN170143 dated 9/29/17). Unless the Owner requests a separate clarification prior to receiving bids and issues it by addendum for all bidders to incorporate into their pricing, all post bid determinations will be equal to or greater than the "electrician" wage rate. To provide clarity to all bidders, please confirm this is in accordance with SRF funding rules and the electrician rate will apply for these undescribed trades (i.e. carpenters, cement finishers, and pipefitters), for all structures other than the Biosolids, Dewatering, and Main Electrical buildings.

    Response: The Technical Specifications state under Bidders Requirements Davis-Bacon Act Wage Determination under the provisions of the Act, contractors or their subcontractors are to pay workers employed directly upon the site of the work no less than the locally prevailing wages and fringe benefits. Davis Bacon Act (DBA) wage determinations (WDs) do not contain every craft needed for all DBA work performed on every contract. When this occurs, DBA provisions contain a conformance procedure for the purpose of establishing a DBA-enforceable wage and benefit rate for missing job classifications. CFR 29 Part 5.5(a)(ii) sets the criteria that must be met to obtain a rate for an unlisted classification. Contractors are responsible for determining the appropriate crafts necessary to perform the contract work. If a classification considered necessary for performance of the work is missing from the WD, the contractor must initiate a request for approval for a proposed wage and benefit rate. The contractor initiates the request by preparing Standard Form 1444, Request for Authorization

of Additional Classification and Rate, of the unlisted craft. Standard Form 1444 is attached to this Addendum (see Item V.2 below) and can also be downloaded at https://www.gsa.gov/forms-library/request-authorization-additional-classification-and-rate.

39. Request: The current contract time is not sufficient to complete the work, and bid form Alternate B will not result in a deduct. Without an extension, bidders will need to include LDs in the base bid price, unnecessarily inflating the overall cost of the project. Please add six additional months to the contract time, and remove Alternate B from the bid form.

    Response: The Contract Time has been extended to 3.5 years. Deductive Alternate B has been deleted from the Bid Form, which has been reissued in this Addendum. Also refer to the changes to Sections 00020 and 00500 in this Addendum.

40. Request: Please confirm the specified LDs include all impact costs associated with not meeting the contractual milestone dates. If there will be additional costs incurred, such as owner or engineer inspector charges, please clarify.

    Response: The specified liquidated damages amount includes Owner and Engineer inspectors' time and other anticipated cost impacts.

41. Request: Please advise what type of cover is required for the (2) V-notch outlet structures on sheet C-32 and detail V on sheet CD-10. Also, please provide details of the weirs.

    Response: No cover is required or proposed. All necessary dimensions and details of the weirs including the weir angle, notch width at top, elevations and notch depth are included on Detail V on Drawing CD-10.

42. Request: Please advise how the (2) 6" ST-DI lines connect to the pads at the digester building as depicted on sheet C-32.

    Response: The two 6" storm drain pipes connect to the 5 proposed 8' long trench drains located between the digester building foundation wall and the equipment maintenance pads at 5 door locations. The trench drain inverts shall slope toward the end with the storm drain pipe connection. Utilize manufacturer's standard pipe connection fittings at the end of each trench drain. See the reissued Drawing C-32 in this Addendum, and refer to the reissued Drawings S-59 and S-60 in this Addendum for trench drain details.

43. Request: Please provide the diameter of the (2) storm lines that are routed to storm water detention ponds 1 & 2 on sheet C-32.

    Response: The outlet pipes for both ponds 1 & 2 are 24" RCP. See the reissued Drawing C-32 in this Addendum for details.

44. Request: Please provide a specification for the RCP pipe.

    Response: Please refer to the new Section 02630 (Storm Drainage Utilities) in this Addendum.

45. Request: Specification section 02616, part 2.05 B. calls for cement lining on plant water, potable water and protected water. Please confirm the following lines shall be cement lined per this section:
    - The 42" and 36" EFF on sheet C-20
    - The 54"/48"/24" Clarifier Effluent on sheet C-18
    - The 60" FEF on sheet C-18
    - The 48"/42" UVEFF on sheet C-18

    Response: As none of the above listed lines are labeled plant water, potable water, or protected water, they are required to be lined per Section 02616, Paragraph 2.05D.

46. Request: Specification section 02616, part 2.05 D. calls for [Protecto] 401 lining on wastewater lines and sludge lines. Please confirm the following lines shall be 401 lined per this section:
    - The 20" FEQ-E/OVF on sheet C-18
    - The 24"/30" CI on sheets C-23 & C-24
    - The 48" BNRE line on sheet C-24

    Response: Confirmed. The above listed lines are to receive Protecto 401 lining in accordance with Section 02616, Paragraph 2.05D.

47. Request: Addendum #9, request #61 asked exactly where polyethylene encasement and bitumastic coating shall be applied to bolts and nuts. Specification section say to apply bitumastic coating to bolts and nuts as specified. Please confirm all buried bolts and nuts shall not require any bitumastic coatings.

    Response: Buried bolts and nuts shall be encapsulated with wax sealing tape in accordance with AWWA Standard C217. Please refer to the changes to Section 02616 in this Addendum.

48. Request: Detail M on sheet CD-6 calls out stainless steel plates for water tight manholes and specification section 02605, part 2.05 B. 3. calls out frame and covers for watertight manholes. No watertight manholes were identified on the drawings, with the exception of the grease interceptors and chemical boxes. Please confirm there are no watertight manholes required.

    Response: Confirmed. There are no watertight manholes proposed in the current plans.

49. Request: Please provide a specification for the PVC lined manholes.

    Response: Refer to the changes to Section 02605 and the new Section 09960 in this Addendum.

50. Request: Response #91 in Addenda #9 reissued drawings A-21, 22, and 23 which deleted the word "Aluminum" from the Biosolids stairwell handrail callouts, and directed the bidders to 05510. Stainless steel handrail does not appear to be applicable in these areas according to Specification 05510 part 2.02.G.1, yet part 1.01.A can be understood to direct us to use steel handrail. We are unable to locate a steel handrail specification in either 05500 or 05510. Please advise what type of handrail is required in these stairwells, and if steel, provide a spec.

    Response: Railing for metal pan stairs shall be galvanized steel. Refer to the changes to Sections 05500 and 05510 in this Addendum.

V. FOR INFORMATION ONLY (Not to be included within the Contract Documents)

1. Plan Holder List (attached)

2. Standard Form 1444 – Request for Authorization of Additional Classification and Rate (attached). Refer to Item IV.38 above.

3. This is the final Addendum.

4. Bidders' attention is directed to the change of the Bid Opening Date, which was announced in Addendum No. 11.

5. We have received requests for additional site visits at the Franklin WRF. No further site visits will be scheduled prior to the bid opening date. Bidders should refer to the historical reference drawings that were provided with Addendum No. 2.

SECTION 00100
INSTRUCTIONS TO BIDDERS

ARTICLE 1. DEFINED TERMS

1.1 Terms used in these Instructions to Bidders shall have the meanings assigned to them as stated in Article 1 of the General Conditions.

ARTICLE 2. QUALIFICATIONS OF BIDDERS

2.1 The Owner or Engineer may make such investigations as deemed necessary to determine the ability of the Bidder to perform the work, and the Bidder shall furnish to the Owner or Engineer all such information and data for this purpose as the Owner or Engineer may request. Such information and data shall be submitted to the Owner or Engineer within five (5) days of receipt of the Owner's written request. The Owner reserves the right to reject any Bid if evidence submitted by or investigation of such Bidder fails to satisfy the Owner that such Bidder is properly qualified to carry out the obligations of the Agreement and to complete the work contemplated therein.

2.2 Where local, state, or federal law requires the Contractor performing the work to be licensed, the Bidder shall be properly qualified according to said laws and shall furnish to the Owner such evidence of qualifications at the time the Bid is submitted.

2.3 The investigation of a Bidder will seek to determine whether the organization is adequate in size, is authorized to do business in the jurisdiction where the project is located, has had previous experience and whether available equipment and financial resources are adequate to assure Owner that the Work will be completed in accordance with the terms of the Agreement. The amount of other work to which the Bidder is committed may also be considered.

2.4 In evaluating Bids, Owner will consider the qualifications of only those Bidders whose Bids are in compliance with the prescribed requirements.

2.5 Owner reserves the right to reject any Bid if the evidence submitted by, or the investigation of, such Bidder fails to satisfy Owner that such Bidder is properly qualified to carry out the obligations of the Contract Documents and to complete the Work contemplated therein.

2.6 All Bidders must be licensed contractors as required by the Contractor Licensing Act of 1976 (TCA Title 62, ch.6).

2.7 If any contractors wish to partner and form a joint venture (JV) for the pursuit of this project, then the resulting entity must meet all applicable requirements of the Contract and Bidding Documents, as well as the requirements of the "RULES OF TENNESSEE BOARD FOR LICENSING CONTRACTORS; CHAPTER 0680-01 LICENSING" for Joint Ventures (Tennessee Rule 0680-01-.11). A joint venture is defined as an association of individuals or businesses that engage in and carry out a specific or limited-purpose business venture for joint profit for a defined period of time. These individuals or businesses combine their efforts, property, money, skills, and knowledge, usually in support of a single government contract. The joint venture is set up for the sole purpose of pooling resources to successfully and cost effectively support the mission of a government agency. Unlike a contract teaming arrangement or typical subcontractor relationship, a joint venture is set up as a separate legal entity with a

separate federal identification number. Based on the development of this legal entity, the Owner and Engineer reserve the right to request additional clarifying organization documentation and records as part of the bid evaluation of any JV submitting on the project.

As evidence of a legally binding JV, the following is the minimum information that must be provided as part of the sealed bid.

2.7.1. An Executed Joint Venture Agreement signed by an authorized signatory for each venturer. An authorized signatory is an individual who has the authority to sign documents and bind the company. The agreement must contain the following:

a) The name of the joint venture (e.g. ABC Construction/XYZ Construction, A Joint Venture).
b) The name and address of the managing partner.
c) A breakdown of the proportionate shares of each participant in the Joint Venture (i.e., the percentage interest in profits and assets or respective share in losses and liabilities that result from the venture). The dollar value of each participant's share of the venture may not exceed the participant's individual single project and aggregate limits by more than 30 percent.
d) The following clause: "Notwithstanding any agreements between the joint venturers, each party of the joint venture shall be jointly and severally responsible to the Owner for all contractual undertakings of the joint venture."

2.7.2. A bonding letter from a surety company licensed to do business in Tennessee and included on the U.S. Treasury Approved Surety list indicating that the JV, as an entity, is bondable for a single limit in at least the amount of the estimated construction cost.

2.7.3. Each of the JV partners must write their license numbers and other required information on the bid envelope, in addition to the joint venture entity's applicable information.

ARTICLE 3. EXAMINATION OF CONTRACT DOCUMENTS AND SITE

3.1 Before submitting his Bid, each Bidder must (a) examine the Contract Documents thoroughly; (b) visit the site to familiarize himself with local conditions that may in any manner affect performance of the Work; (c) familiarize himself with federal, state, and local laws, ordinances, rules, and regulations affecting performance of the Work; and (d) carefully correlate his observations with the requirements of the Contract Documents.

3.2 Boring locations are indicated in Plan and Profile views on the Drawings. The geotechnical reports are included in the Appendix to the Project Manual. Such reports are not part of the Contract Documents.

3.3 Site surveys that were performed for this Project and historic site information that was relied upon by the Engineer in preparing the Contract Documents are incorporated into the Drawings or included in the Appendix to the Project Manual.

3.4 Before submitting his Bid, each Bidder will, at his own expense, make such additional surveys and investigations as he may deem necessary to determine his Bid price for performance of the Work within the terms of the Contract Documents.

3.5 On request, Owner will provide each Bidder access to the Project site(s) to conduct such investigations and tests as each Bidder deems necessary for the submission of a Bid.

3.6 The lands upon which the Work is to be performed, rights of way for access thereto and other lands designated for use by Contractor in performing the Work are identified in the Supplementary Conditions, General Requirements or on the Drawings.

3.7 The submission of a Bid will constitute an incontrovertible representation by the Bidder that he has complied with every requirement of this Article 3 and that the Contract Documents are sufficient in scope and detail to indicate and convey understanding of all terms and conditions for performance of the Work. Failure to do so will not relieve a successful Bidder of his obligation to furnish all material and labor necessary to carry out the provisions of the Agreement.

ARTICLE 4. INTERPRETATIONS AND ADDENDA

4.1 All questions about the meaning or intent of the Contract Documents shall be received in writing by the Engineer via letter or e-mail, no later than 12:00 p.m. Central Time on November 28, 2017. Questions shall be submitted to the following:

Mr. Robert Huguenard, P.E., BCEE
CDM Smith Inc.
3200 Windy Hill Road
Suite 210 West
Atlanta, Georgia 30339
E-mail: huguenardrp@cdmsmith.com

With copy to:
Ms. Patricia McNeese, P.E., Utilities Project Manager
City of Franklin
Water Management Department
124 Lumber Drive
Franklin, Tennessee 37064
E-mail: patricia.mcneese@franklintn.gov

4.2 Written clarifications or interpretations will be issued by Addenda not later than December 22, 2017. Only questions answered by formal written Addenda will be binding. Oral and other interpretations of clarifications will be without legal effect. Addenda, or a link to a file server from which the Addenda may be downloaded, will be sent via electronic mail with return receipt requested, to all parties recorded as having received the Contract Documents. All Addenda so issued shall become part of the Contract Documents.

4.3 Bidders are responsible for determining that they have received all Addenda issued.

4.4 Addenda to the Contract Documents will be acknowledged by all bidders. A bidder's failure to acknowledge receipt of Addenda is grounds for rejection of his Bid.

ARTICLE 5. BID SECURITY

5.1 Each Bid must be accompanied by Bid Security in the form of cash, a Certified Check or Cashier's Check drawn on a National or Tennessee Bank and payable to Owner, or a Bid Bond

prepared on the Bid Bond Form attached hereto, duly executed by the Bidder as principal and having as surety thereon a surety company approved by the Owner (those named on the current list of "Surety Companies Acceptable on Federal Bonds" as published by the Audit Staff Bureau of Accounts, U.S. Treasury Department will be acceptable to the Owner unless the Bidder receives written notification to the contrary from the Owner at least 5 days prior to the date for the opening of Bids.) Attorneys-in-Fact who sign Bid Bonds must file with each bond a certified and effectively dated copy of their power of attorney. The Bid Security shall be sealed in a separate envelope from the Bid and then attached to the envelope containing the Bid.

5.2 The Bid Security shall be in the amount of 5% of the Bid in accordance with the Notice to Bidders. The Bid Security of the accepted Bidder will be retained until he has executed the Agreement and has furnished the required Contract Security. If the accepted Bidder fails to execute and deliver the agreement and furnish the required Contract Security within 10 days of the issuance of the Notice of Award, Owner may determine that the Bidder has abandoned the Contract, and thereupon the Bid Forms and acceptance shall be null and void, the Owner may annul the Notice of Award, and the Bid Security of that Bidder will be forfeited as liquidated damages for such failure or neglect and to indemnify said Owner for any loss which may be sustained by failure of the Bidder to execute the Agreement and furnish the bonds as aforesaid, provided that the amount forfeited to Owner shall not exceed the difference between the Bid Price of said Bidder and that of the next lowest responsible and eligible bidder and provided further that, in case of death, disability, or other unforeseen circumstances affecting the Bidder, such Bid Security may be returned to the Bidder.

5.3 The Bid Security of any Bidder whom Owner believes to have a reasonable chance of receiving the award may be retained by Owner until the earlier of the fifth day, excluding Saturdays, Sundays, and legal holidays after the executed Agreement is delivered by Owner to Contractor and the required Contract Security is furnished or the expiration of the time specified for the Bids to Remain Open. After such date, any Bid Security will be returned upon demand of the Bidder. Bid Security of other Bidders will be returned within 5 days, excluding Saturdays, Sundays and legal holidays of the actual date of opening of the Bids. All Bid Securities will be returned on the execution of the Agreement or if no award is made, within 90 days, excluding Saturdays, Sundays and legal holidays after the actual date of opening of the Bids, unless forfeited under the conditions herein stipulated.

5.4 Bid Security in the form of a Bid Bond will not normally be returned to Bidder unless specifically requested by Bidder. Cash or certified check will be returned according to the above-stated procedures.

ARTICLE 6. ISSUANCE OF BIDDING DOCUMENTS

6.1 Complete sets of the Bidding Documents in the number and for the non-refundable sum stated in the Notice to Bidders may be obtained from the Issuing Office listed in the Notice to Bidders. This charge is applicable regardless of whether the documents are to be used for bidding or non-bidding purposes. Documents will be obtainable until the time set for opening bids. The charge for Plans and/or Specifications will be applicable before the letting and for three months after the letting. All documents will be furnished without refund and transmitted at your risk.

6.2 Complete sets of Contract Documents shall be used in preparing Bids; neither Owner nor Engineer assume any responsibility for errors or misinterpretations resulting from the use of incomplete sets of Contract Documents.

6.3 Owner and Engineer, in making copies of Contract Documents available, do so only for the purpose of obtaining Bids on the Work and do not confer a license or grant for any other use.

ARTICLE 7. REJECTION OF BIDS

7.1 Bids will be rejected as irregular if, prior to the formal opening of the bid, all of the following documents have not been signed: (1) the bidder shall sign by written signature the Bid form, (2) the bidder shall sign by written signature the Bid Bond form or the Bid Security, whichever is applicable, (3) the Agent or Attorney-in-Fact representing a Surety Company shall sign by written signature the Bid Bond, if applicable. In addition, Bid Proposals will be rejected if any of the above signatures are a reproduced copy, such as, but not limited to a photostatic copy or a facsimile transmission. An original, dated and valid Power of Attorney for the Attorney-in-Fact must accompany the Bid Proposal and the Contract. The accompanying Power of Attorney must be dated, and the date must be the exact same date as the date on the Bid Bond. The Bid Proposal and the Bid Bond, including the attached Power of Attorney, shall be valid and binding for 90 days subsequent to the date of opening bids.

7.2 Bid Proposals shall be completed on the forms as issued. All of the documents that are bound therein are part of the Bid Proposal and shall not be detached. Bid Proposals shall not be taken apart. Bid Proposals taken apart may be subject to rejection. Proposals will be rejected as being irregular if they (1) are not prepared on the prescribed forms; (2) show any omissions, alterations of form, additions, or conditions not called for, unauthorized alternate bids, or irregularities of any kind; (3) or if they fail to contain a unit price for each item listed. Bid Proposals shall be completed on the forms as issued. Photostatic or facsimile copies of Proposal sheets may not be attached to the Bid Proposal. Proposals containing forms not issued by the City of Franklin may be subject to rejection.

ARTICLE 8. CONTRACT TIME

8.1 The number of days for the completion of Work (Contract Time) is set forth in the Bid Form and will be included in the executed Agreement. Bidder must agree to start work on or before a date to be specified in a written Notice to Proceed by the Owner and to fully complete the Work within the stated Contract Time. Bidder must agree also to pay as liquidated damages the sum specified in the Bid Form and to be included in the executed agreement for each day beyond the specified Contract Time that the Work remains incomplete. Any provisions for liquidated damages are set forth in the Contract Documents.

ARTICLE 9. SUBCONTRACTORS

9.1 The Bidder is specifically advised that any person, firm, or other party to whom it is proposed to award a Subcontract under the Agreement must be acceptable to the Owner. No part of the Agreement may be subcontracted without the prior written approval of the Owner.

9.2 The apparent low Bidder and any other Bidder so requested will, within 7 days, excluding Saturdays, Sundays, and legal holidays after the date of the Notice of Award, submit to Owner an initial list of all Subcontractors and/or other persons and organizations (including those who are to furnish the principal items of material and equipment) proposed for those portions of the Work as to which such identification is so required. If requested by Owner, said list shall be accompanied by an experience statement with pertinent information as to similar projects and

other evidence of qualification for each such Subcontractor, person, and/or organization. If Owner or Engineer, after due investigation, has reasonable objection to any proposed Subcontractor, person, or organization on the apparent low Bidder's list, he may request the apparent low Bidder to submit an acceptable substitute without an increase in his Bid price. If the apparent low Bidder declines to make any such substitution, he will not thereby sacrifice his Bid Security. Any Subcontractor, other person, or organization so listed and to whom Owner or Engineer does not make written objection within 14 days, excluding Saturdays, Sundays, and legal holidays after the Owner's receipt of the list (including any requested experience statements or other evidence of qualification) will be deemed acceptable to Owner and Engineer. Contractor shall not be required to employ any Subcontractor, other person, or organization against whom he has reasonable objection.

9.3 No less than 14 days, excluding Saturdays, Sundays and legal holidays, before engaging a new Subcontractor (i.e., the date the Subcontractor begins work on the Project), the Contractor shall provide written notice to the Owner identifying the Subcontractor and the work the Subcontractor will perform. If requested by the Owner, the written notice shall be accompanied by an experience statement with pertinent information as to similar projects and other evidence of qualification for each such Subcontractor. Any Subcontractor to whom Owner or Engineer does not make written objection within 14 days, excluding Saturdays, Sundays, and legal holidays after the Owner's receipt of the list (including any requested experience statements or other evidence of qualification) will be deemed acceptable to Owner and Engineer.

ARTICLE 10. BID FORM

10.1 The Bid Form is included in the Contract Documents.

10.2 Each Bid must be submitted on the prescribed Bid Form with all blank spaces for bid prices completed in ink, typewritten, or filled out electronically before printing. The Bid price of each item shall be stated in words and figures. All blank spaces for Bid prices must be filled in with the unit prices for the item or the lump sum for which the Bid is made. Both unit prices and total prices shall be entered on the Bid Form and in case of discrepancies, the unit prices shall take precedence. Where space is provided in the Bid Form for entry of a price in words, such entry shall be made; and in case of discrepancy between words and numerals, words will take precedence. Discrepancies between the indicated sum of any column of figures and the correct sum thereof will be resolved in favor of the correct sum.

10.3 Bid Form shall not be altered in any way by the Bidder. Such shall constitute an irregular Bid and could result in rejection of the Bid by the Owner.

10.4 Unless otherwise stated on the Bid Form or in the Notice to Bidders, the Bid requested shall include furnishing all labor, tools, equipment, and materials necessary to complete the Work as described in the Contract Documents.

10.5 For Bid Items in a unit price format, the quantities included represent the Engineer's best estimate of the quantities necessary to complete the Work but are subject to change. Any change, whether an addition to or a deduction from the original estimated quantities as shown on the Bid Form, will be paid for at the unit price bid with appropriate additions to or deductions from the total amount paid for that Bid Item. All work, which will be paid for separately, is included as a unit price or lump sum pay item. All work necessary for satisfactory completion of the Work, as

described in the Contract Documents, must be completed by the Contractor, whether included as a separate pay item or not.

10.6 The Bid shall contain an acknowledgment of receipt of all Addenda, the numbers of which shall be filled in on the Bid Form.

10.7 Bids by corporations must be executed in the corporate name by the president or vice-president (or other corporate officer accompanied by evidence of authority to sign.) The corporate address and state of incorporation shall be shown below the signature. The corporate seal should be affixed and attested by the secretary or an assistant secretary.

10.8 Bids by Limited Liability Companies shall be executed in the Limited Liability name by the Manager (or other Limited Liability Company officer/representative accompanied by evidence of authority to sign.) The Limited Liability Company address and state where the Limited Liability Company was formed shall be shown below the signature.

10.9 Bids by partnerships must be executed in the partnership name and signed by a partner. The partner's title must appear under the signature, and the official address of the partnership must be shown below the signature.

10.10 All names must be typed or lettered (printed) below the signature.

10.11 The address to which communications regarding the Bid are to be directed shall be shown.

10.12 The Owner may consider informal any Bid not prepared and submitted in accordance with the provisions stated in these Instructions to Bidders and may waive any informalities or reject any or all Bids because of such informalities.

10.13 Bids lacking required documents or not submitted in accordance with Tennessee State Bidding Laws will be rejected and may subject bidder to a one (1) year ban from submittal on future City of Franklin projects.

ARTICLE 11. PRE-BID CONFERENCE

11.1 A Pre-Bid Conference will be held from 10:00 a.m. to 12:00 p.m. Central Time on October 24, 2017, at the City Hall Training Room, 109 3rd Avenue South, Franklin, Tennessee 37064. Following the Pre-Bid Conference, there will be a site visit from 1:00 p.m. to 4:00 p.m. Central Time at the Franklin WRF at 135 Claude Yates Drive, Franklin, Tennessee 37064. A second site visit at the Franklin WRF will be available to plan holders from 7:00 a.m. to 5:00 p.m. Central Time on November 7, 2017; sign-up instructions for this second site visit will be distributed at the Pre-Bid Conference and via Addendum. Attendance at the Pre-Bid Conference and participation in at least one site visit are MANDATORY for all contractors planning to submit a Bid Proposal on this project.

ARTICLE 12. SUBMISSION OF BIDS

12.1 Bids shall be submitted at the time and place indicated in the Invitation to Bid. Any Bid received after the date and time specified for the opening of Bids will not be considered.

12.2 One copy of each Bid shall be submitted in a sealed opaque envelope. The face of the envelope shall contain the word "BID", the name of the Project, Bidder's Name, License Number, Classification and Expiration Date in accordance with State law (TCA § 62-6-119). Electrical, Plumbing, HVAC, and Process Control System Supplier (PCSS), as well as any additionally required Subcontractors' Name, License Number, Classification and Expiration Date in accordance with State Law (TCA § 62-6-119), and the Time and Date of the Bid Opening shall also appear on the envelope. If the Bid is sent by mail, the sealed envelope shall be enclosed in a separate mailing envelope with the notation "SEALED BID ENCLOSED" on the face thereof.

12.3 The Bid Security shall be sealed in a separate envelope from the Bid and then attached to the envelope containing the Bid.

12.4 Joint Ventures (JVs) must include the information specified in Article 2.7 and sub-articles as part of their sealed bids.

12.5 Bidders are cautioned that it is the responsibility of each individual bidder to assure that their bid is in the possession of the responsible official or the designated alternate prior to the stated time and at the place of the Bid Opening. Owner is not responsible for bids delayed by mail and/or delivery services, of any nature.

12.6 In accordance with State law, bids that are not labeled in accordance with Article 12.2 will not be opened and will be rejected.

12.7 The Contractor shall comply with all provisions of TCA § 50-9-113 as it relates to Drug-Free Workplace requirements. The Drug-Free Affidavit must be completed and included at the time the Bid is submitted.

ARTICLE 13. MODIFICATION AND WITHDRAWAL OF BIDS

13.1 Any Bid may be modified or withdrawn prior to the scheduled time for the opening of Bids or authorized postponement thereof. Such modification or withdrawal shall be accomplished by an appropriate document duly executed (in the manner that a Bid must be executed) and delivered to the place where Bids are to be submitted at any time prior to the opening of Bids.

13.2 Any Bid may be modified or withdrawn by telegraphic communication, provided that such telegraphic communication is received prior to the scheduled time for opening Bids and provided further that the Owner is satisfied that a written confirmation of said telegraphic communication over the signature of the Bidder was mailed prior to the opening of the Bids. The telegraphic communication should not reveal the Bid price but should provide the addition, subtraction, or other modification so that the final prices or terms will not be known by the Owner until the sealed Bid is opened. If written confirmation is not received within 3 days from the opening of Bids, no consideration will be given to the telegraphic communication.

13.3 No Bid may be withdrawn for a period of 90 days, excluding Saturdays, Sundays, and legal holidays, after the actual date of the opening of the Bids.

ARTICLE 14. OPENING OF BIDS

14.1 Bids will be opened at the place, time, on the date, and in the manner indicated in the Notice to Bidders, or as modified by any Addendum.

ARTICLE 15. BIDS TO REMAIN OPEN

15.1 All Bids shall remain open for 60 days, excluding Saturdays, Sundays, and legal holidays, after the actual date of the opening of the Bids. The Owner may, in his sole discretion, release any Bid and return the Bid Security prior to that date.

ARTICLE 16. AWARD OF CONTRACT

16.1 Owner reserves the right to reject any and all Bids and waive any and all informalities if it is in the Owner's best interest to do so, and the right to disregard all nonconforming, non-responsive, or conditional Bids or counter proposals.

16.2 In evaluating Bids, Owner shall consider the qualifications of the Bidders, whether or not the Bids comply with the prescribed requirements, and alternatives and unit prices, if requested in the Bid Forms. He may consider the qualifications and experience of Subcontractors and other persons and organizations (including those who are to furnish the principal items of material or equipment) proposed for those portions of the Work as to which the identity of Subcontractors and other persons and organizations must be submitted as specified in the Supplementary Conditions or Specifications. He may conduct such investigations as he deems necessary to establish the responsibility, qualifications, and financial ability of Bidders, proposed Subcontractors, and other persons and organizations to do the Work in accordance with the Contract Documents to Owner's satisfaction within the prescribed time. Owner reserves the right to reject the Bid of any Bidder who does not pass any such evaluation to Owner's satisfaction.

16.3 A Bid which includes for any item a Bid Price that is abnormally low or high may be rejected as unbalanced.

16.4 Owner also reserves the right to reject the Bid of any Bidder that Owner considers to be unqualified relative to Article 1 above.

16.5 The governing body of the City of Franklin, Tennessee shall reserve the right to reject any and all bids if said body deems it necessary in the best interest of the citizens of Franklin, Tennessee.

16.6 Owner will award the Contract without consideration of alternate manufacturers/suppliers.

16.7 If a contract is to be awarded, it will be awarded to the lowest responsible, responsive and eligible Bidder (Successful Bidder) whose evaluation by Owner indicates to Owner that the award will be in the best interests of the Project. Such a Bidder shall possess the skill, ability, and integrity necessary for the faithful performance of the work. The term "lowest responsible, responsive and eligible Bidder" as used herein shall mean the Bidder whose Bid is the lowest of those Bidders and meets all requirements of the Contract Documents, and who possesses the skill, ability and integrity necessary to the faithful performance of the Work.

16.8 If the contract is to be awarded, Owner will give the apparent successful Bidder a Notice of Award within 90 days, excluding Saturdays, Sundays, and legal holidays, after the actual date of the opening of the Bids.

16.9 When Owner gives a Notice of Award to the Successful Bidder, it will be accompanied by at least five unsigned copies of the Agreement and all other applicable Contract Documents. The

apparent Successful Bidder must execute and deliver to the Owner the Agreement and required Contract Security within 10 days, excluding Saturdays, Sundays, and legal holidays, of the issuance of the Notice of Award.

16.10 Simultaneous with the delivery of the executed counterparts of the Agreement to Owner, Contractor shall deliver the required Contract Security. Surety bond or bonds shall be prepared on the Bond Form(s) included in this Project Manual (unless other forms are acceptable to the Owner) and in accordance with provisions of the General Conditions and Supplementary Conditions.

16.11 Attorneys-in-Fact who sign contract bonds must file with each bond certified an effectively dated copy of their power of attorney.

ARTICLE 17. PERFORMANCE, PAYMENT AND OTHER BONDS

17.1 Performance, Payment and other Bonds shall be provided in accordance with Article 5 of the Conditions of the Contract. The Successful Bidder must furnish a 100 percent Performance Bond and a 100 percent Payment Bond with a surety company acceptable to the Owner.

17.2 All Bonds required as Contract Security shall be furnished with the executed Agreement.

ARTICLE 18. INSURANCE

18.1 Insurance requirements shall be as indicated in the General Conditions, Supplementary Conditions, and Section 00750, Insurance Requirements for Contractors.

ARTICLE 19. LAWS AND REGULATIONS

19.1 The Bidder's attention is directed to the fact that all applicable federal, state, and local laws, as well as rules and regulations of all authorities having jurisdiction over construction of the Project shall apply to the work, and they will be deemed to be included in the Contract Documents just as though they were written out in full in said Contract Documents.

19.2 This project is subject to the Safety and Health Regulations (CFR 29, Part 1926 and all subsequent amendments) as promulgated by the U.S. Department of Labor on June 24,1974 and CFR 29, Part 1910, General Industry Safety and Health Regulations Identified as Applicable to Construction.

19.3 The Successful Bidder shall comply with the Department of Labor Safety and Health Regulations for Construction promulgated under the Occupational Safety and Health Act of 1970 (PL 91 596) and under Section 107 of the Contract Work Hours and Safety Standards Act (PL 91 54).

19.4 The Successful Bidder shall have a competent person or persons, as required under the Occupational Safety and Health Act, on the Site to inspect the Work and to supervise the conformance of the Work with the regulations of the Act.

ARTICLE 20. SPECIAL NOTICES

20.1 Bidder's attention is directed to Insurance and Bonding requirements as discussed in the General Conditions and Supplementary Conditions.

20.2 The City of Franklin is an equal opportunity affirmative action employer, drug-free, with policies of nondiscrimination based on race, sex religion, color, national or ethnic origin, age disability, or military service. The City of Franklin does not discriminate based on race, color, national origin, age, sex or disability in its hiring and employment practices, or in admission to, access to, or operation of its programs, services, and activities with regard to all aspects of this Contract. By submitting a Bid, the Contractor certifies and warrants that it will also comply.

Michelle M. Hatcher, P.E.
City of Franklin, Tennessee

END OF SECTION

THE REMAINDER OF THIS PAGE INTENTIONALLY LEFT BLANK

THIS PAGE INTENTIONALLY LEFT BLANK

© 2017 CDM Smith
All Rights Reserved

SECTION 00300
BID FORM

PROJECT IDENTIFICATION: CITY OF FRANKLIN
FRANKLIN WRF
MODIFICATIONS & EXPANSION PROJECT
FRANKLIN, TENNESSEE
COF CONTRACT NO. 2017-0264

THIS BID IS SUBMITTED BY: _____

ADDRESS: _____

_____

DATE OF BID: _____

TABLE OF ARTICLES

	Page
Article 1 - Bid Recipient	1
Article 2 - Bidder's Acknowledgments	2
Article 3 - Bidder's Representations	2
Article 4 - Further Representations	3
Article 5 - Basis of Bid	3
Article 6 - Time of Completion	20
Article 7 - Attachments to Bid	20
Article 8 - Defined Terms	20
Article 9 - Bid Submittal	20

ARTICLE 1 - BID RECIPIENT

1.01 This Bid Is Submitted To: *City of Franklin – Engineering Department*
Franklin City Hall, Suite 133
109 3rd Avenue South
Franklin, TN 37064

1.02 The undersigned Bidder proposes and agrees, if this Bid is accepted, to enter into an Agreement with Owner in the form included in the Bidding Documents to perform all Work as specified or indicated in the Bidding Documents for the prices and within the times indicated in the Bid and in accordance with the other terms and conditions of the Bidding Documents.

© 2017 CDM Smith
All Rights Reserved

Name of Bidder: _____

ARTICLE 2 - BIDDER'S ACKNOWLEDGMENTS

2.01 Bidder accepts all of the terms and conditions of the Advertisement and Instructions to Bidders, including without limitations those dealing with the dispositions of Bid security. The Bid will remain subject to acceptance for 90 days after the Bid opening excluding Saturdays, Sundays, and legal holidays, or for such longer period of time that Bidder may agree to in writing upon request of Owner.

ARTICLE 3 - BIDDER'S REPRESENTATIONS

3.01 In submitting this Bid, Bidder represents that:

A. Bidder has examined and carefully studied the Bidding Documents, the other related data identified in the Bidding Documents, and the following Addenda, receipt of which is hereby acknowledged.

Addendum No.	Addendum Date

Addendum No.	Addendum Date

B. Bidder has visited the Site and become familiar with and is satisfied as to the general, local, and Site conditions that may affect cost, progress, and performance of the Work.

C. Bidder is familiar with and is satisfied as to all Federal, State, and local Laws and Regulations that may affect cost, progress, and performance of the Work.

D. Bidder has carefully studied all: (1) reports of explorations and tests of subsurface conditions at or contiguous to the Site and all drawings of physical conditions in or relating to existing surface or subsurface structures at or contiguous to the Site (except Underground Facilities) which have been identified in SC-4.02, and (2) reports and drawings of a Hazard Environmental Condition, if any, which has been identified in SC-4.06 (if any).

E. Bidder has obtained and carefully studied (or accepts the consequences for not doing so) all additional or supplementary examinations, investigations, explorations, tests, studies, and data concerning conditions (surface, subsurface and Underground Facilities) at or contiguous to the Site which may affect cost, progress, or performance of the Work or which relate to any aspect of the means, methods, techniques, sequences, and procedures of construction to be employed by the Bidder, including applying the specific means, methods, techniques, sequences, and procedures of construction expressly required by the Bidding Documents to be employed by Bidder, and safety precautions and programs incident thereto.

© 2017 CDM Smith
All Rights Reserved

Name of Bidder: _____

F. Bidder does not consider that any further examinations, investigations, explorations, tests, studies, or data are necessary for the determination of this Bid for performance of the Work at the price(s) bid and within the times and in accordance with the other terms and conditions of the Bidding Documents.

G. Bidder is aware of the general nature of the Work to be performed by Owner and others at the Site that relates to the Work as indicated in the Bidding Documents.

H. Bidder has correlated the information known to Bidder, information and observations obtained from visits to the Site, reports and drawings identified in the Bidding Documents, and all additional examinations, investigations, explorations, tests, studies, and data with the Bidding Documents.

I. Bidder has given Engineer written notice of all conflicts, errors, ambiguities, or discrepancies that Bidder has discovered in the Bidding Documents, and the written resolution thereof by Engineer is acceptable to Bidder.

J. The Bidding Documents are generally sufficient to indicate and convey understanding of all terms and conditions for the performance of the Work for which this Bid is submitted.

K. Bidder will submit proof of licensure to do work in the State of Tennessee. This evidence shall be submitted with the Bid.

ARTICLE 4 - FURTHER REPRESENTATIONS

4.01 Bidder further represents that:

A. This Bid is genuine and not made in the interest of or on the behalf of any undisclosed individual or entity and is not submitted in conformity with any agreement or rules of any group, association, organization, or corporation;

B. Bidder has not directly or indirectly induced or solicited any other Bidder to submit a false or sham Bid;

C. Bidder has not solicited or induced any individual or entity to refrain from bidding; and

D. Bidder has not sought by collusion to obtain for itself any advantage over any other Bidder or over Owner.

ARTICLE 5 - BASIS OF BID

5.01 Bidder agrees to complete the Work for the price(s) indicated in the Schedule of Prices which follows and is further described in Section 01025 – Measurement and Payment.

© 2017 CDM Smith
All Rights Reserved

Name of Bidder: _____

SCHEDULE OF PRICES

All bid items shall include costs for furnishing to Owner all materials, equipment and supplies and for all costs incurred in completing the Work including installation of all materials, equipment and supplies furnished, complete in place and ready for continuous service, all other labor, permit fees, taxes, insurance miscellaneous costs, overhead and profit.

PART 1 – BASE BID

Base Bid for Single Prime Construction of the Franklin WRF Modifications & Expansion Project, complete as indicated on the Drawings and as specified and including all work (includes work that would be deducted under the alternates below).

Item No.	Item Description	Est. Quantity	Units	Unit Price in Figures	Total Price in Figures
A	All work under the Bidding Documents, complete as indicated on the Drawings and Specifications, exclusive of Base Bid Items B through Q listed below.	LS	LS	$_____	$_____
B	Mobilization and Demobilization: For all costs associated with project mobilization and demobilization in accordance with the Drawings and Specifications	LS	LS	$_____	$_____
C	Pre-Negotiated Ultraviolet (UV) Disinfection System and services as supplied by TrojanUV (See Section 11265)	LS	LS	$806,353.00	$806,353.00
D	Pre-Negotiated Thermal Hydrolysis Pretreatment (THP) System and services as supplied by Cambi, Inc. (See Section 11351)	LS	LS	$3,232,721.00	$3,232,721.00
E	Solar Sludge Drying System (See Section 13265) NOT IN CONTRACT	LS	LS	--$0.00--	--$0.00--
F	Parts and service provided by Southern Sales Company to change the speed of two sets of two (2) existing Gorman Rupp T3 scum pumps (See Appendix E and Drawings M-48 and M-49)	LS	LS	$8,869.00	$8,869.00

© 2017 CDM Smith
All Rights Reserved

Name of Bidder: _____

Item No.	Item Description	Est. Quantity	Units	Unit Price in Figures	Total Price in Figures
G	Structural repairs to BNR Basins 1 and 2 as shown on Drawing S-12:				
	G1. Repairs to slab and wall expansion joints (Repair Notes 1, 2, and 3)	1,730	LF	$_____ per LF	$_____
	G2. Repairs to cracked and spalled concrete (Repair Notes 4, 5, 6, 7, 9, and 11)	110	SF	$_____ per SF	$_____
	G3. Repairs to cracked and spalled concrete at beam bearing connection to existing wall (Repair Note 10)	10	SF	$_____ per SF	$_____
	G4. Repairs to exposed reinforcing (Repair Note 8)	40	SF	$_____ per SF	$_____
H	Structural repairs to spalled concrete at the Return Sludge Pump Station as shown on Drawing S-24	LS	LS	$_____	$_____
I	Removal, onsite management, dewatering, hauling, and disposal of accumulated sludge and debris from existing structures that are dewatered for the work under this project	3,100	Tons	$_____ per ton	$_____
J	Removal, onsite management, dewatering, hauling, and disposal of accumulated sludge and debris from abandoned pipelines that are demolished for the work under this project	3	Tons	$_____ per ton	$_____
K	Rock and boulder excavation	3,200	Tons	$_____ per ton	$_____
L	Over Excavation and associated backfill with structural fill	6,200	CY	$_____ per CY	$_____

© 2017 CDM Smith
All Rights Reserved

Name of Bidder: _____

Item No.	Item Description	Est. Quantity	Units	Unit Price in Figures	Total Price in Figures
M	Additional photographic services as requested by the Owner per Section 01322				
	M1. Photographer's mobilization/ demobilization (trip) cost	10	Trips	$_____ per trip	$_____
	M2. Photographer's hourly rate	40	Hours	$_____ per hour	$_____
N	Complete replacement of filter media in the remaining ABW Filter	LS	LS	$_____	$_____
O	On-Call Assistance and Maintenance Supervision for the Pre-Dewatering Centrifuges (See Section 11363, Paragraph 1.05D.1.g)	4	Weeks	$_____ per week	$_____
P	Hauling, alkalinity addition, reconstitution, heating, and injection of seed sludge for the digesters (See Section 01666)	135	Tons	$_____ per ton	$_____
Q	Owner's Contingency	N/A	N/A	N/A	$4,000,000.00

TOTAL PART 1 (BASE BID) (Items A through Q) PRICE (IN NUMBERS): $_____

TOTAL PART 1 (BASE BID) PRICE (IN WORDS):_____

_____

Amount of PART 1 – BASE BID shall be shown in both words and figures. In the event of a discrepancy between the unit price bid and the extension, the unit price will be deemed intended by the bidder and the extension shall be adjusted. In the event of a discrepancy between the sum of the extended amounts and the bid total, the sum of the extended amounts shall govern.

The Owner's contingency is an allowance for unforeseen conditions and Owner initiated additional work. These contingency dollars are only available through change orders approved by the Owner. Unused Owner's contingency dollars revert back to the Owner at the end of the project.

© 2017 CDM Smith
All Rights Reserved

Name of Bidder: _____

PART 2 – ALLOWANCE ITEMS

The Bidder shall include in the Total Bid the lump sum allowances specified below. Payment for items of allowance shall be made in accordance with Section 01025, Measurement and Payment. Any unused balance of the allowances shall revert to Owner upon completion of the project.

Item No.	Item Description	Est. Quantity	Unit Price in Figures	Total Price in Figures
1	Allowance for procurement of equipment and furnishings for the Solids Processing Building laboratory and control room	As determined by the Engineer	$210,000.00	$210,000.00
2	Allowance for inspection and refurbishment or replacement, as needed, of existing discharge valves at the Reuse Pump Station	As determined by the Engineer	$50,000.00	$50,000.00
3	Allowance for structural modifications associated with the selection of a Pre-Dewatering Centrifuge differing from that shown on the Drawings	As determined by the Engineer	$50,000.00	$50,000.00
4	Allowance for structural modifications associated with the selection of a Post-Dewatering Screw Press differing from that shown on the Drawings	As determined by the Engineer	$20,000.00	$20,000.00
5	Allowance for purchase and installation of ground cover, shrubbery, plants, and trees as specified by the City of Franklin Building & Neighborhood Services Department	As determined by the Engineer	$20,000.00	$20,000.00
6	Allowance for improvements to and refurbishment of the remaining ABW Filter	As determined by the Engineer	$20,000.00	$20,000.00
7	Allowance for materials testing (See Section 01410)	As determined by the Engineer	$500,000.00	$500,000.00
8	Allowance for Middle Tennessee Electrical Membership Corporation (MTEMC) fees	Fee to be negotiated with MTEMC	$150,000.00	$150,000.00

TOTAL PART 2 (ALLOWANCE ITEMS) (Items 1 through 8) PRICE (IN NUMBERS): **$ 1,020,000.00**

TOTAL PART 2 (ALLOWANCE ITEMS) (Items 1 through 8) PRICE (IN WORDS): One million twenty thousand dollars and no cents

© 2017 CDM Smith
All Rights Reserved

Name of Bidder: _____

PART 3 – BID SUMMARY

ALL WORK SHOWN AND SPECIFIED IN THE CONTRACT DOCUMENTS	
TOTAL PART 1 (BASE BID)	**$**_____
TOTAL PART 2 (ALLOWANCE ITEMS)	**$1,020,000.00**
TOTAL BID (IN NUMBERS)	**$**_____
TOTAL BID (IN WORDS) _____ _____	

Amount of PART 3 – BID SUMMARY shall be shown in both words and figures. In the event of a discrepancy between the sum of the extended amounts and the bid total, the sum of the extended amounts shall govern.

THE REMAINDER OF THIS PAGE HAS BEEN LEFT BLANK INTENTIONALLY

© 2017 CDM Smith
All Rights Reserved

Name of Bidder: _____

PART 4 – ADDITIVE AND DEDUCTIVE ALTERNATES FOR BID

The Bidder may complete the following Additive or Deductive Alternates in this part of the Bid Form. The Owner, and solely the Owner, will determine if these Additive or Deductive Alternates will be accepted, and the Contract Price will be adjusted in the amount of the Additive or Deductive Alternates accepted by the Owner, after the award of the Contract. The Bidder shall be bound to accept the Additive or Deductive Alternates selected by the Owner, and the Owner is in no way bound to accept the Additive or Deductive Alternates.

The Additive or Deductive Alternate includes selling and delivering to the Owner all necessary material, equipment, and supplies, including installation of all material, equipment, supplies, all other labor, permit fees, taxes, insurance, other miscellaneous costs, overhead and profit, except for those costs specifically included in other Bid Items. All requirements of the Contract Documents shall be met by the Additive or Deductive Alternate.

DEDUCTIVE ALTERNATE A – Amount to be deducted from Base Bid Item A to neither procure nor install the Jet Mixing System specified in Section 11300 and as shown on the Drawings.

DEDUCTIVE ALTERNATE A – LUMP SUM: $_____

© 2017 CDM Smith
All Rights Reserved

Name of Bidder: _____

PART 5 – NOT USED

PART 6 – BASE BID MAJOR EQUIPMENT ITEMS

The Total Bid in Part 1 shall include the costs for the circled Manufacturers/Suppliers listed in this Major Equipment Schedule, exclusive of any Alternate Bid Items. Should a Bidder fail to indicate which manufacturer or supplier its Bid is based on, or circles more than one listed manufacturer/supplier per equipment item, the Bidder shall provide the first listed ("a") manufacturer/supplier for its Bid for the amount included in the Total Bid at no increase in the Contract amount. The Contractor shall submit working drawings in conformance with the General Conditions and Specification Section 01300 for any modifications to the Contract Drawings required due to the submittal of the base bid manufacturers or suppliers. The Bidder is aware that the Owner will award the Contract without consideration of Alternate manufacturers/suppliers.

The Major Equipment Schedule lists the base bid equipment manufacturer/supplier as applicable for major equipment items and key suppliers for the Franklin WRF Modifications & Expansion Project. The Bidder must indicate which named manufacturer/supplier of major equipment it intends to provide by circling one of the manufacturers/suppliers listed. Listed equipment suppliers must meet the terms and conditions and technical requirements of the Contract.

Specification Section No.	Equipment Description	Manufacturer / Supplier
11211	Vertical Split Case Centrifugal Booster Pumps	a) Flowserve Pump Division b) Aurora c) Fairbanks Nijhuis d) Patterson
11214	Vertical Turbine Pumps	a) Flowserve b) Simflo c) Fairbanks Nijhuis d) Peerless
11223	Vertical Shaft Mixers (BNR Basins)	a) Philadelphia Mixers b) Invent Environmental Technologies Inc.
11224	Vertical Shaft Mixers (Polymer Aging Tanks)	a) Lightnin b) Philadelphia Mixing Solutions, Ltd. c) Chemineer, Inc. d) Cleveland Mixer

© 2017 CDM Smith
All Rights Reserved

Name of Bidder: _____

Specification Section No.	Equipment Description	Manufacturer / Supplier
11242	Chemical Metering Pumps	a) Pulsafeeder b) ProMinent
11244	Polyethylene Storage Tanks	a) Poly Processing Co., Inc. b) Snyder Industries, Inc.
11246	Polymer Dilution and Feed Systems	a) VeloDyne b) ProMinent Fluid Controls, Inc. c) UGSI Chemical Feed, Inc.
11254	Odor Control Chemical Feed Systems	a) Pulsafeeder b) ProMinent
11255	Chemical Scrubber Odor Control System	a) Evoqua Water Technologies b) Indusco Environmental, Inc. c) Duall Division, Met-Pro Corp. d) Daniel Mechanical
11257	Activated Carbon Odor Control System	a) Daniel Mechanical b) Evoqua Water Technologies c) ECS Environmental Solutions
11259	Biofilter Odor Control System	a) Biorem b) ECS Environmental Solutions c) Daniel Mechanical d) BioAir Solutions, LLC
11282	Slide Gates, Weir Gates, Stop Logs, and Stop Plates	<u>Aluminum slide gates, weir gates, and appurtenances:</u> a) Golden Harvest, Inc. b) Hydro Gate Company c) Rodney Hunt Company d) Whipps, Inc.

© 2017 CDM Smith
All Rights Reserved

Name of Bidder: _____

Specification Section No.	Equipment Description	Manufacturer / Supplier
		Stainless steel slide gates, weir gates, and appurtenances: a) Golden Harvest, Inc. b) Hydro Gate Company c) Rodney Hunt Company d) Whipps, Inc. Stop plates: a) Rodney Hunt Company b) Washington Aluminum Co. c) Hydro Gate Corporation d) Craft Machine Works Stop logs and frames: a) Ashbrook Simon-Hartley b) Craft Machine Works
11300	Jet Mixing System	a) Mixing Systems, Inc. b) Mass Transfer Systems (MTS) c) Parkson Corporation
11301	Digester, Sludge & FOG Storage Tank Mixing Systems	a) Evoqua Water Technologies b) Vaughan Co., Inc.
11303	Submersible Sump Pumps	Alum containment area and valve / flow meter vaults: a) Dayton Solids Processing Building: a) Stancor

© 2017 CDM Smith
All Rights Reserved

Name of Bidder: _____

Specification Section No.	Equipment Description	Manufacturer / Supplier
11312	Vertical Non-Clog Wastewater Pumps	a) Fairbanks Nijhuis b) Flowserve c) Morris
11313	Self-Priming Centrifugal Pumps	a) WEMCO / Weir Specialty Pumps b) Gorman-Rupp
11315	Progressing Cavity Pumps	a) Moyno, Inc. b) Seepex, Inc. c) Netzsch Pumps North America, LLC
11317	Rotary Lobe Pumps	a) Boerger, LLC b) VerderGPM c) Swaby Lobeline d) Vogelsang USA
11320	Vortex Grit Collection Equipment	a) Smith and Loveless, Inc. b) Ovivo (Jones and Attwood) c) WesTech Engineering, Inc. d) Envirodyne Systems, Inc.
11325	Grit Classification Equipment	a) Smith and Loveless, Inc. b) Ovivo (Jones and Attwood) c) WesTech Engineering, Inc. d) Envirodyne Systems, Inc.
11332	Screenings Washing and Compacting Equipment	a) Vulcan Industries, Inc. b) Headworks, Inc. c) Huber Technology, Inc. d) JWC Environmental

© 2017 CDM Smith
All Rights Reserved

Name of Bidder: _____

Specification Section No.	Equipment Description	Manufacturer / Supplier
11335	Multiple Rake Bar Screens	a) Huber Technology, Inc. b) Headworks, Inc. c) Vulcan Industries, Inc. d) JWC Environmental
11336	Pressurized Solids Screening Systems	a) Huber Technology, Inc. b) Hydro International
11344	FRP Chemical Storage Tanks	a) Justin Tanks b) Augusta Fiberglass c) An-Cor Industrial Plastics, Inc. d) Plas-Tanks Industries, Inc.
11350	Pre-Engineered Fiberglass Reinforced Plastic (FRP) Building	a) Tracom, Inc. b) Kenco Plastics Co. c) Plasti-Fab d) MWF
11354	Stainless Steel Effluent Troughs	a) Jim Myers & Sons
11363	Pre-Dewatering Centrifuges	a) GEA Westfalia Separator Division b) Andritz Separation, Inc. c) Flottweg Separation Technology, Inc. d) Alfa Laval, Inc.
11366	Post-Dewatering Screw Presses	a) Huber Technology, Inc. b) Schwing Bioset, Inc. c) Ishigaki USA Ltd.
11370	Multistage Centrifugal Blowers and Accessories	a) Hoffman (Gardner Denver Nash) b) Continental

© 2017 CDM Smith
All Rights Reserved

Name of Bidder: _____

Specification Section No.	Equipment Description	Manufacturer / Supplier
11371	Positive Displacement Blowers (Scum Aeration)	a) Aerzen USA Corporation b) Roots Division of Dresser Industries c) Hibon Inc.
11372	Modifications to Existing Mechanical Surface Aerators	<u>For BNR Basins No. 1 and No. 2:</u> a) Ovivo
		<u>For BNR Basin No. 3:</u> a) WesTech, Inc.
11383	Coarse Bubble Air Diffuser System	a) Sanitaire Water Pollution Control Corp. b) Aeromix Systems, Inc. c) Aquarius Technologies
11392	Automatic Samplers	a) Hach Co. b) Teledyne Isco
11398	Gas Engine Generator and Accessories	a) Nixon Energy Solutions b) Thompson Machinery
11610	Laboratory Fume Hoods	a) Labconco Corp. b) Fisher Hamilton LLC c) Hanson Lab Furniture, Inc. d) Kewaunee Scientific Corp., Laboratory Products Group e) Leonard Peterson & Co., Inc.
13205	Wire Wrapped Prestressed Concrete Tanks	a) Crom Corp. b) Precon Corp.
13212	Bolted Steel Storage Tanks	a) Columbian TecTank b) Highland Tank c) Tarsco Bolted Tank

© 2017 CDM Smith
All Rights Reserved

Name of Bidder: _____

Specification Section No.	Equipment Description	Manufacturer / Supplier
13236	FOG Heat Exchangers	a) WesTech Engineering Inc. b) JDV Equipment Corporation c) Walker Process Equipment d) Olympus Technologies, Inc.
13238	Digester Gas Handling and Safety Equipment	<u>Condensate and sediment traps, drip traps, flame trap assemblies, gas foam separator, and condensate accumulator:</u> a) Varec, Inc.
		<u>Pressure-vacuum relief valves with flame arrestor and safety selector valve:</u> a) Varec, Inc.
		<u>Pressure relief and flame trap assembly, flame check :</u> a) Varec, Inc.
		<u>Emergency pressure relief hatch:</u> a) Groth b) Shand and Jurs c) Varec, Inc.
		<u>Pressure gauges:</u> a) Dresser Industries, Inc., Ashcroft Division b) U.S. Gauge c) Crosby-Ashton
13239	Waste Gas Burner	a) Groth Corporation b) Shand & Jurs c) Varec Biogas

© 2017 CDM Smith
All Rights Reserved

Name of Bidder: _____

Specification Section No.	Equipment Description	Manufacturer / Supplier
13240	Digester Gas Treatment System	a) Unison Solutions, Inc. b) Perennial Energy, LLC c) LFG Specialties, LLC d) John Zink Company, LLC
14555	Shaftless Sludge Screw Conveyors	a) Spirac Engineering b) Custom Conveyor Corp. c) Jim Myers and Sons d) KWS Manufacturing e) JDV Equipment Corporation
14630	Overhead Bridge Cranes	<u>Bridge crane systems:</u> a) Whiting Corp. b) American Monorail, Inc. c) ACCO Louden Systems
		<u>Hoisting equipment:</u> a) Yale Hoists b) Coffing Hoists c) Harnischfeger d) Wright e) Shaw Box
14900	Monorail and Hoist Systems	<u>Monorail track, suspension fittings, carriers and trolleys, electrification, and related accessories:</u> a) Whiting Corp. b) ACCO Chain & Lifting Products Division

© 2017 CDM Smith
All Rights Reserved

Name of Bidder: _____

Specification Section No.	Equipment Description	Manufacturer / Supplier
14900	Monorail and Hoist Systems (cont.)	Hoisting equipment: a) Yale Hoists (Yale's "Budgit" Division) b) Coffing Hoists
16345	Medium Voltage (5kV) Switchgear	a) Cutler-Hammer b) Square D Company c) General Electric Company
16370	Variable Frequency Drives	a) Allen-Bradley
16430	Pad Mounted Transformer(s)	a) Eaton b) Square D Company c) General Electric
16431	Liquid Filled Substation Transformer(s)	a) Eaton b) Square D Company c) General Electric
16450	480 Volt Switchgear	a) Square D Company b) Cutler-Hammer
16480	480 Volt Motor Control Centers	a) Cutler-Hammer b) Square D Company c) General Electric Company
16483	Solid State Reduced Voltage Starters	a) Cutler-Hammer b) Square D Company c) General Electric Company d) Allen-Bradley

© 2017 CDM Smith
All Rights Reserved

Name of Bidder: _____

PART 7 – MAJOR EQUIPMENT MANUFACTURER SUBSTITUTION

Any Manufacturer, including those not listed as an acceptable manufacturer, may be listed as a substitution.

The Bidder understands that after a contract is awarded, the Owner may, at its sole discretion, select items of any Manufacturer listed in the following substitute tabulation. If awarded the Contract, the Bidder agrees to furnish and install any substitutions for the price indicated. The BASE BID will be adjusted accordingly.

The Engineer may require detailed information to be submitted for preliminary evaluation of a substitute Manufacturer. This information could include technical and performance details of the equipment and other information deemed necessary by the Engineer and/or as described in the Contract Documents.

If an offered substitution includes items of equipment of any Manufacturer that may require any modification to or deviation from the Drawings, the undersigned agrees to prepare and submit detailed Drawings to the Engineer showing all modifications to structures, piping, electrical, mechanical and instrumentation work, required to adapt the plans to the equipment selected. The Bidder further understands that the Engineer will review said detailed drawings of modifications and either approve them or indicate thereon changes necessary to comply with the project requirements. Detailed drawings that are not approved will be revised and then resubmitted to the Engineer for approval. If the Engineer determines that the substitute equipment cannot be approved, the original Base Bid equipment shall be provided. The prices listed in the following tabulation are "installed" prices and take into consideration any changes that may be required to the original design.

SUBSTITUTION

Equipment Item	**Manufacturer**	**Add (Deduct) From Base Bid**
_____	_____	_____
_____	_____	_____
_____	_____	_____
_____	_____	_____
_____	_____	_____
_____	_____	_____
_____	_____	_____
_____	_____	_____

© 2017 CDM Smith
All Rights Reserved

Name of Bidder: _____

ARTICLE 6 - TIME OF COMPLETION

6.01 Bidder agrees that the Work will be substantially complete per paragraph 14.04 of the General Conditions and will be completed and ready for final payment in accordance with paragraph 14.07.B of the General Conditions on or before the dates or within the number of calendar days indicated in the Agreement.

6.02 Bidder accepts the provisions of the Agreement as to liquidated damages in the event of failure to complete the work within the Contract Times.

ARTICLE 7 - ATTACHMENTS TO THIS BID

7.01 The following documents are attached to and made a condition of the Bid:

A. Required Bid security in the form of the Bid Bond Form (Section 00410) or Cash, Certified Check or Cashier's Check drawn on a National or Tennessee Bank and payable to Owner (circle type of security provided);

B. All forms of division zero shall be completed (except for those which explicitly state that they are to be completed after the bid and except for the notice of award, Owner-Contractor Agreement, notice to proceed, performance and payment bonds, application for payment, certificate of substantial completion, certificates of insurance, and certificate of Owner's attorney).

ARTICLE 8 - DEFINED TERMS

8.01 The terms used in this Bid with the initial capital letters have the meanings indicated in the Instructions to Bidders, the General Conditions, and the Supplementary Conditions.

ARTICLE 9 - BID SUBMITTAL

9.01 This Bid submitted by:

If Bidder is:

<u>An Individual</u>

Name (typed or printed): _____

By: _____
(Individual's signature)

SEAL

Doing business as: _____

© 2017 CDM Smith
All Rights Reserved

Name of Bidder: _____

A Partnership

Partnership Name: _____ SEAL

By: _____
(Signature of general partner -- attach evidence of authority to sign)

Name (typed or printed): _____

A Corporation

Corporation Name: _____

State of Incorporation: _____

Type (General Business, Profession, Service, Limited Liability):

_____

By: _____
(Signature -- attach evidence of authority to sign)

Name (typed or printed):

_____

Title: _____ CORPORATE SEAL

Attest _____
(Signature of Corporate Secretary)

Date of Qualification to do business in State of Tennessee is ___/___/_____

© 2017 CDM Smith
All Rights Reserved

Name of Bidder: _____

A Joint Venture

Name of Joint Venture: _____

First Joint Venture Name: _____ SEAL

By: _____
(Signature of joint venture partner -- attach evidence of authority to sign)

Name (typed or printed):

_____

Title: _____

Second Joint Venture Name: _____ SEAL

By: _____
(Signature of joint venture partner -- attach evidence of authority to sign)

Name (typed or printed):

_____

Title: _____

(Each joint venturer must sign. The manner of signing for each individual, partnership, and corporation that is party to the venture should be in the manner indicated above.)

Bidder's Business address:

_____

_____

_____

Business Phone No. (_____)_____

Business Fax No. (_____)_____

Business E-Mail Address _____

State Contractor License No. _____. (If applicable)

Employer's Tax ID No. _____

Phone and Fax Numbers, and Address for receipt of official communications, if different from Business contact information:

© 2017 CDM Smith
All Rights Reserved

Name of Bidder: _____

_____

_____

_____

9.02 Bid submitted on _____, 2017.

END OF SECTION

THE REMAINDER OF THIS PAGE INTENTIONALLY LEFT BLANK

© 2017 CDM Smith
All Rights Reserved

Name of Bidder: _____

THIS PAGE INTENTIONALLY LEFT BLANK

© 2017 CDM Smith
All Rights Reserved

SECTION 01025
MEASUREMENT AND PAYMENT

PART 1 GENERAL

1.01 SCOPE OF WORK

A. The scope of this section defines the items included in each bid item in the Bid Form, Section 00300 of these Specifications. Payment will be made based on the specified items included in the description in this section for each bid item.

B. All contract prices included in the Schedule of Prices section will be full compensation for all labor, materials, tools, equipment and incidentals necessary to complete the Franklin WRF Modifications & Expansion Project as shown on the Drawings and/or as specified in the Contract Documents to be performed under this contract. Actual quantities of each item bid on a unit price basis will be determined upon completion of the construction in the manner set up for each item in this section of the Specifications. Payment for all items listed in the Schedule of Prices will constitute full compensation for all work shown and/or specified to be performed under this project.

PART 2 PRODUCTS (NOT USED)

PART 3 EXECUTION

3.01 MEASUREMENT AND PAYMENT

A. All bid items (base bid items and alternates) are lump sum or unit price for the work specified in terms of measurement. The payment shall cover all costs for each of the items as discussed below such that costs of other items are not affected if Owner decides to not proceed with any item(s) under this contract or to have it completed by others. Where the term construction is used below it refers to all work required of the contract documents including and related to construction such as furnishing all labor, materials, equipment, incidentals, fees, permits, taxes, mobilization/demobilization, overhead and profit, and other miscellaneous costs required to complete the work. Payment shall be made at the lump sum or unit price for each item in the Bid Form.

3.02 BASE BID ITEMS

A. Part 1, Bid Item A

1. Lump Sum – Franklin WRF Modifications & Expansion per the Contract Documents including all Work shown in the Drawings and Specifications, exclusive of items B through Q below.

2. This Lump Sum item includes performing all work under the contract exclusive of items B through Q below. The lump sum price for this item is all inclusive and includes but is not limited to: all materials, supervision, equipment, labor, overhead and profit required to provide the Work complete, in-place, fully tested, ready for continuous uninterrupted service and Final Acceptance by the Owner.
   a. Measurement: Shall be in accordance with the accepted Schedule of Values.

© 2017 CDM Smith
All Rights Reserved

b. Payment: Progress payments shall be based on the actual percentage of Work satisfactorily completed during the progress payment period in accordance with the approved Schedule of Values. Final Payment shall be the balance of the stated Lump Sum.

B. Part 1, Bid Item B

C. Lump Sum – Mobilization and Demobilization

1. Mobilization shall consist of preparatory work and operations necessary for the movement of personnel, equipment, supplies, and incidentals to the project site; for the establishment of offices, buildings, and other facilities necessary for work on the project; and for all other work or operations which must be performed or costs incurred when beginning work on the project. Mobilization includes submittal and approval of all submittals required to perform mobilization activities.

2. Demobilization shall consist of all work and operations necessary to move personnel, equipment, supplies, and incidentals from the project site; remove all offices, buildings, and other facilities that were necessary for work on the project; and for other work that must be performed or costs incurred after acceptable completion of construction operations on the project. The amount of this Bid Item shall be not more than 5 percent of the Total Bid Price.
   a. Measurement: Mobilization shall be considered to be fifty percent complete when fifty percent of the submittals described above have been approved. Mobilization shall be considered one hundred percent complete when one hundred percent of the submittals described above have been approved and all other mobilization activities are complete (i.e., when the Owner has completely released the Contractor to begin actual construction). Demobilization shall be considered to be complete upon final acceptance of the work and final closeout of the project.
   b. Payment: Mobilization cost shall be assumed to constitute sixty percent of the total lump sum bid amount for mobilization and demobilization. Payment for mobilization will be made in two separate partial payments. The first partial payment, fifty percent of the mobilization value, will be made when mobilization is fifty percent complete. The second partial payment, fifty percent of the mobilization value, will be made upon one hundred percent completion of the mobilization. The remaining forty percent of the mobilization and demobilization lump sum bid amount will be made upon completion of demobilization.

D. Part 1, Bid Item C

1. Lump Sum – Pre-negotiated ultraviolet (UV) disinfection system and services as supplied by TrojanUV (see Section 11265).

2. This lump sum includes only the purchase price of the equipment and the manufacturer's services defined in Section 11265 and Appendix B of the Specifications. Demolition of the existing UV equipment; demolition within the existing UV structure; construction of the new UV structure and influent and effluent diversion boxes; maintenance of plant operations; and related equipment, installation, electrical and instrumentation work, site work, testing, and making the system ready for continuous, uninterrupted service are provided under Bid Item A.
   a. Measurement: Shall be in accordance with the accepted Schedule of Values.

© 2017 CDM Smith
All Rights Reserved

b. Payment: Progress payments shall be based on the actual percentage of Work satisfactorily completed during the progress payment period in accordance with the approved Schedule of Values and Section 11265, Paragraph 1.09.

E. Part 1, Bid Item D

1. Lump Sum – Pre-negotiated thermal hydrolysis pretreatment (THP) system and services as supplied by Cambi, Inc. (see Section 11351).

2. This lump sum includes only the purchase price of the equipment and the manufacturer's services defined in Section 11351 and Appendix C of the Specifications. Construction of the THP system foundation and canopy; and related equipment, installation, electrical and instrumentation work, site work, testing, and making the system ready for continuous, uninterrupted service are provided under Bid Item A.
   a. Measurement: Shall be in accordance with the accepted Schedule of Values.
   b. Payment: Progress payments shall be based on the actual percentage of Work satisfactorily completed during the progress payment period in accordance with the approved Schedule of Values and Section 11351, Paragraph 1.09.

F. ~~Part 1, Bid Item E~~ **(NOT IN CONTRACT)**

~~1. Lump Sum - Solar Sludge Drying System (See Section 13265).~~

~~2. This lump sum includes selling and delivering to the Owner all necessary material, equipment, and supplies, including installation of all material, equipment, supplies, all other labor, permit fees, taxes, insurance, other miscellaneous costs, overhead and profit, except for those costs specifically included in other Bid Items.~~
   ~~a. Measurement: Shall be in accordance with the accepted Schedule of Values.~~
   ~~b. Payment: Progress payments shall be based on the actual percentage of Work satisfactorily completed during the progress payment period in accordance with the approved Schedule of Values, Section 13265, and Appendix D.~~

G. Part 1, Bid Item F

1. Lump Sum – Parts and service provided by Southern Sales Company to change the speed of two sets of two (2) existing Gorman Rupp T3 scum pumps (See Appendix E and Drawings M-48 and M-49).

2. This lump sum includes only the purchase price of the equipment and the manufacturer's services defined in Appendix E of the Specifications. Construction of the scum holding tanks; and related equipment, installation, electrical and instrumentation work, site work, testing, and making the system ready for continuous, uninterrupted service are provided under Bid Item A.
   a. Measurement: Request for payment for this work may be made upon completion, testing and acceptance of the work.
   b. Payment: Payment at the lump sum price established in the Bid Form shall be made upon completion of the work.

H. Part 1, Bid Item G

© 2017 CDM Smith
All Rights Reserved

Structural repairs to BNR Basins 1 and 2, including repairs to slab and wall expansion joints; repairs to cracked and spalled concrete; and repairs to exposed reinforcing per Drawing S-12.

1. Bid Item G1 – Unit Price – Repairs to slab and wall expansion joints (Repair Notes 1, 2, and 3).

   The linear foot price quoted under this item shall include removal of the existing expansion joint sealant, installation of new sealant, and all other materials, supervision, equipment, labor, overhead and profit required to complete the work.
   a. Measurement: Measurement for payment for expansion joint repair will be made on a linear foot basis as measured in place and approved by the Engineer. Measurement will be to the nearest linear foot as achieved by tape measure survey.
   b. Payment: Payment for expansion joint repair will be made on a linear foot basis by multiplying the number of feet of repaired expansion joint by the bid unit price.

2. Bid Item G2 – Unit Price – Repairs to cracked and spalled concrete (Repair Notes 4, 5, 6, 7, 9, and 11).

   The square foot price quoted under this item shall include removal of loose and unsound concrete, cleaning of rebar, application of bonding agent, application of a two-component repair mortar, and all other materials, supervision, equipment, labor, overhead and profit required to complete the work.
   a. Measurement: Measurement for payment for repairs to cracked and spalled concrete will be made on a square foot basis as measured in place and approved by the Engineer. Measurement will be to the nearest square foot as achieved by tape measure survey.
   b. Payment: Payment for repairs to cracked and spalled concrete will be made on a square foot basis by multiplying the number of square feet of repaired area by the bid unit price.

3. Bid Item G3 – Unit Price – Repairs to cracked and spalled concrete at beam bearing connection to existing wall (Repair Note 10).

   The square foot price quoted under this item shall include removal of loose and unsound concrete, cleaning of rebar, application of bonding agent, application of a two-component repair mortar, and all other materials, supervision, equipment, labor, overhead and profit required to complete the work.
   a. Measurement: Measurement for payment for repairs to cracked and spalled concrete at the beam bearing connection to the existing wall will be made on a square foot basis as measured in place and approved by the Engineer. Measurement will be to the nearest square foot as achieved by tape measure survey.
   b. Payment: Payment for repairs to cracked and spalled concrete at the beam bearing connection to the existing wall will be made on a square foot basis by multiplying the number of square feet of repaired area by the bid unit price.

4. Bid Item G4 – Unit Price – Repairs to exposed reinforcing (Repair Note 8).

   The square foot price quoted under this item shall include removal of concrete around and behind the exposed reinforcing steel, removal of loose and unsound concrete, cleaning of rebar, application of bonding agent, application of a two-component repair mortar, and all

© 2017 CDM Smith
All Rights Reserved

other materials, supervision, equipment, labor, overhead and profit required to complete the work.

a. Measurement: Measurement for payment for repairs to exposed reinforcing will be made on a square foot basis as measured in place and approved by the Engineer. Measurement will be to the nearest square foot as achieved by tape measure survey.
b. Payment: Payment for repairs to exposed reinforcing will be made on a square foot basis by multiplying the number of square feet of repaired area by the bid unit price.

I. Part 1, Bid Item H

1. Lump Sum – Structural repairs to spalled concrete at the Return Sludge Pump Station per Drawing S-24.

2. The lump sum quoted under this item shall include removal of loose and unsound concrete, cleaning of rebar, application of bonding agent, application of a two-component repair mortar, and all other materials, supervision, equipment, labor, overhead and profit required to complete the work.
   a. Measurement: Shall be in accordance with the accepted Schedule of Values.
   b. Payment: Payment for repairs to spalled concrete at the Return Sludge Pump Station will be based on the actual percentage of Work satisfactorily completed during the progress payment period in accordance with the approved Schedule of Values. Final Payment shall be the balance of the stated Lump Sum.

J. Part 1, Bid Item I

1. Unit Price – Removal, onsite management, dewatering, hauling, and disposal of accumulated sludge and debris from existing structures that are dewatered for the work under this project.

2. The unit price quoted under this item is all inclusive and includes but is not limited to all materials, supervision, equipment, labor, overhead and profit required to complete the work.
   a. Measurement: The number of tons of dewatered sludge and debris removed from treatment basins and hauled to an appropriate lined landfill as measured on the landfill scale. The tons of dewatered sludge and debris shall be calculated by subtracting the truck tare weight from the truck gross weight. Signed final weigh tickets must accompany pay requests.
   b. Payment: Payment shall be calculated based on the number of tons of dewatered sludge and debris identified on the weigh ticket multiplied by the unit price bid for this item.

K. Part 1, Bid Item J

1. Unit Price – This item includes management of the solids, sludge and debris from pipes that must be demolished, abandoned in place, replaced, relocated, or dewatered for any reason. Management includes removal, dewatering, hauling and disposal of this solids, sludge and debris.

2. The unit price quoted under this item is all inclusive and includes but is not limited to all materials, supervision, equipment, labor, overhead and profit required to complete the work.

© 2017 CDM Smith
All Rights Reserved

a. Measurement: The number of tons of dewatered solids, sludge and debris hauled and disposed of to an appropriate lined landfill as measured on the landfill scale. The tons of dewatered sludge and debris shall be calculated by subtracting the truck tare weight from the truck gross weight. Signed final weigh tickets must accompany pay requests.
b. Payment: Payment shall be calculated based on the number of tons of dewatered sludge and debris identified on the weigh ticket multiplied by the unit price bid for this item.

L. Part 1, Bid Item K

1. Unit Price – Rock and boulder excavation.

2. Measurement:
   a. The number of tons of rock removed from the project site and hauled to a certified scale. The tons of rock shall be calculated by subtracting the truck tare weight from the truck gross weight. Signed final weigh tickets must accompany pay requests.
   b. No compensation will be provided for rock that is excavated beyond the limits required for pipe trenches or foundations (excess excavation). For structures, rock excavated more than five feet from the neat lines of the structure foundation or six inches below the bottom of the structure foundation will be considered excess excavation. For pipe trenches, rock excavated beyond the limits identified in the pipe trench details will be considered excess excavation. Field measurements will be made to define the volume of excess rock excavation, and the weight of the excess rock will be calculated assuming a density of 150 pounds per cubic foot.
   c. The Engineer shall be notified immediately when rock is encountered. The completed excavation into rock shall not be filled with bedding, structure, or other materials until the Engineer has inspected it to determine if excess rock excavation has occurred. No compensation will be provided for rock removed from excavations that are covered up prior to Engineer inspection and may result in the Engineer ordering uncovering of the work.
   d. No additional payment will be made for imported structural fill to replace excess rock excavation.

3. Payment: Payment for rock excavation will be made for the quantities as determined above, measured in tons, at the unit price per ton listed in the Bid Form. If excess rock excavation occurs, the tons of excess rock (as calculated above) shall be deducted from the tons of rock measured at the scale.
   a. Price and payment shall be full compensation for excavation and proper off-site disposal of rock and all work incidental thereto for which payment is not provided under other items.

M. Part 1, Bid Item L

1. Unit Price – Over excavation and associated backfill with structural fill.

2. Measurement:
   a. Measurement of over excavation and associated backfill with structural fill for trench excavation will extend only downward (not horizontally beyond the trench limits shown on the Drawings except as directed otherwise by the Engineer). Over excavation shall only be to the depth directed by the Engineer and for the purpose of removing unsuitable foundation materials as determined by the Engineer.

© 2017 CDM Smith
All Rights Reserved

b. Measurement of over excavation and associated backfill with structural fill for structure excavation shall be as indicated in the paragraph above, but may extend horizontally as necessary to meet the structural foundation requirements as determined by the Engineer.
c. If overexcavation occurs through error by the Contractor or if improper dewatering or drainage softens the subgrade and overexcavation is required before installing the bedding, such removal and replacement of material shall be performed at the Contractor's cost and will not be measured for payment.
d. No material which runs or flows into the excavation from outside shall be measured for payment.
e. Measurement shall be made by the Contractor's surveyor whose services shall be included in the unit price for the work.
f. Structural fill placed outside the above limits will not be measured for payment.
g. The upper vertical boundary for measurement of over excavation shall be the elevation that the Contractor would have had to excavate down to in order to install the structure or pipeline (per the Drawings and Specifications) if no unsuitable material had been encountered. If the Contractor chooses to use a mud mat or perform other methods that require excavation below the upper vertical boundary defined above, then the top elevation of over excavation shall be dropped accordingly. Measurement for width shall be limited to 18 inches beyond the outside of pipes.

3. Payment:
   a. Payment for over excavation and backfill with structural fill will be made for the quantity as above determined at the price per cubic yard established in the Bid Form, which price and payment shall be full compensation for sheeting, dewatering, excavation and proper disposal of all materials below normal grade and furnishing, placing and compacting structural fill refill and all work incidental thereto. Structural fill and compaction shall be as defined in Section 02200.

N. Part 1, Bid Item M

This bid item applies to work performed by the photographer that is above and beyond the scope defined in Section 01322. The work under Section 01322 shall be part of the work under Bid Item A.

1. Bid Item M1 – Unit Price – Photographer's mobilization/demobilization (trip) cost.

   The unit price quoted under this item shall include the photographer's preparatory work and operations necessary for the movement of his personnel, equipment, supplies, and incidentals to the project site; and all work and operations necessary to remove his personnel, equipment, supplies, and incidentals from the project site for each trip the photographer makes to the project site at the request of the Owner.
   a. Measurement: Measurement for payment for the photographer's mobilization/ demobilization (trip) costs will be made on a per-trip basis as shown in the paid invoices for the photographer's work.
   b. Payment: Payment for the photographer's mobilization/demobilization (trip) costs will be made on a per-trip basis by multiplying the number of trips invoiced by the bid unit price.

2. Bid Item M2 – Unit Price – Photographer's hourly rate.

© 2017 CDM Smith
All Rights Reserved

The unit price quoted under this item shall include all labor necessary to provide the additional photographic services requested by the Owner while onsite; all labor necessary to complete post-processing of the images after the photographer has left the site; and all labor necessary to upload the post-processed images to the web-based hosting site; and shall include all material, equipment, supplies, permit fees, taxes, insurance, other miscellaneous costs, overhead and profit.

a. Measurement: Measurement for payment for the photographer's hourly rate will be made on a per-hour basis as shown in the paid invoices for the photographer's work.
b. Payment: Payment for the photographer's hourly rate will be made on a per-hour basis by multiplying the number of hours invoiced by the bid unit price.

O. Part 1, Bid Item N

1. Lump Sum – Complete replacement of filter media in the remaining ABW Filter.

2. The lump sum quoted under this item is all inclusive and includes but is not limited to removal of the existing filter media; pressure washing and cleaning of the filter, proper disposal of the removed media at a landfill; installation of the new filter media; and all materials, supervision, equipment, labor, overhead and profit required to complete the work. This Bid Item does not include improvements to or refurbishment of the filter, which is included in Allowance Item No. 6.
   a. Measurement: Shall be in accordance with the accepted Schedule of Values.
   b. Payment: Progress payments shall be based on the actual percentage of Work satisfactorily completed during the progress payment period in accordance with the approved Schedule of Values.

P. Part 1, Bid Item O

1. Unit Price – On-Call Assistance and Maintenance Supervision for the Pre-Dewatering Centrifuges (Section 11363, Paragraph 1.05D.1.g).

2. The unit price quoted under this item shall include all labor, material, equipment, supplies, permit fees, taxes, insurance, travel, lodging, meals, freight, other miscellaneous costs, overhead and profit required to provide On-Call Assistance and Maintenance Supervision for the Pre-Dewatering Centrifuges in accordance with Section 11363, Paragraph 1.05D.1.g.
   a. Measurement: Measurement for payment will be made on a per-visit basis as shown in the manufacturer's written trip report for each visit.
   b. Payment: Payment will occur on a per-visit basis. Request for payment shall be submitted with the Contractor's next pay request, with the trip report for that visit attached. Each payment will be the price per week (five eight-hour days) entered on the Bid Form for Bid Item O.

Q. Part 1, Bid Item P

1. Unit Price – Hauling, alkalinity addition, reconstitution, heating, and injection of seed sludge for the digesters (See Section 01666).

   The unit price quoted under this item shall include all labor, material, equipment, supplies, permit fees, taxes, insurance, travel, lodging, meals, freight, other miscellaneous costs, overhead and profit required to transport, apply chemicals, reconstitute, heat, and inject the

sludge cake specified in Section 01666 to seed the digesters. All other services to be provided under Section 01666 are included in the Base Bid.

a. Measurement: The number of tons of seed cake delivered to the Franklin WRF. The number of tons shall be calculated by subtracting the truck tare weight from the truck gross weight. Signed final weigh tickets must accompany pay requests.
b. Payment: Payment shall be calculated based on the number of tons of seed sludge delivered, multiplied by the unit price bid for this item.

R. Part 1, Bid Item Q

1. Owner's Contingency. This item is contingency funding that is available only to the Owner and is the source of funding in the event that a legitimate change order situation was to arise. Should a legitimate change order situation arise, the change order amount and details would be negotiated between the Owner/Engineer and the Contractor.
   a. Measurement: To be established in the negotiation of change orders.
   b. Payment: To be established in the negotiation of change orders.

3.03 ALLOWANCE ITEMS

A. Measurement and payment for Work performed under these Allowance Items, when authorized by the Engineer, shall be made in accordance with the applicable provisions of Specification Section 01035, Change Order Procedures, unless otherwise specified. The Engineer shall determine the method of payment for any Work so authorized. Any unexpended balance of the Allowance amount shall revert to the Owner at the conclusion of the Contract. The Contractor shall not be allowed an adjustment in overhead and/or profit based on any unexpended portion of these Allowance Items.

B. The Contractor shall not be allowed an adjustment of Contract Time for Work performed under these Allowance Items unless the Work in question has a demonstrable impact on the overall project Critical Path. Any adjustment in Contract Time shall be limited to the decrease in float equal to the time period beginning with written notification by the Contractor, to receipt of written directions from the Engineer plus the actual demonstrable time impact on the critical path required to execute the required corrections.

1. Allowance Item No. 1
   a. Allowance for procurement of equipment and furnishings for the Solids Processing Building laboratory and control room.
   b. This item is intended to pay the Contractor for costs to furnish and install all new equipment and furnishings for the laboratory and control room on the second floor of the Solids Processing Building.
   c. Measurement: Measurement for Work performed under this Item when authorized by the Engineer shall be in compliance with the provisions of Section 01035 as determined by the Engineer.
   d. Payment: Payment for Work performed under this Item when authorized by the Engineer shall be in compliance with the provisions of Section 01035 as determined by the Engineer

2. Allowance Item No. 2
   a. Allowance for inspection and refurbishment or replacement, as needed, of existing discharge valves at the Reuse Pump Station.

© 2017 CDM Smith
All Rights Reserved

b. This item is intended to pay the Contractor for costs to inspect existing discharge valves at the Reuse Pump Station, and to either refurbish or replace the valves based on the results of the inspection.
c. Measurement: Measurement for Work performed under this Item when authorized by the Engineer shall be in compliance with the provisions of Section 01035 as determined by the Engineer.
d. Payment: Payment for Work performed under this Item when authorized by the Engineer shall be in compliance with the provisions of Section 01035 as determined by the Engineer.

3. Allowance Item No. 3
   a. Allowance for structural modifications associated with the selection of a Pre-Dewatering Centrifuge differing from that shown on the Drawings.
   b. This item is intended to provide the Owner with a funding source for costs associated with any increase in the quantity of concrete and reinforcing steel required to accommodate the selected Pre-Dewatering Centrifuge should it differ from that shown on the Drawings.
   c. Measurement: Measurement for Work performed under this Item when authorized by the Engineer shall be in compliance with the provisions of Section 01035 as determined by the Engineer.
   d. Payment: Payment for Work performed under this Item when authorized by the Engineer shall be in compliance with the provisions of Section 01035 as determined by the Engineer.

4. Allowance Item No. 4
   a. Allowance for structural modifications associated with the selection of a Post-Dewatering Screw Press differing from that shown on the Drawings.
   b. This item is intended to provide the Owner with a funding source for costs associated with any increase in the quantity of concrete and reinforcing steel required to accommodate the selected Post-Dewatering Screw Press should it differ from that shown on the Drawings.
   c. Measurement: Measurement for Work performed under this Item when authorized by the Engineer shall be in compliance with the provisions of Section 01035 as determined by the Engineer.
   d. Payment: Payment for Work performed under this Item when authorized by the Engineer shall be in compliance with the provisions of Section 01035 as determined by the Engineer.

5. Allowance Item No. 5
   a. Allowance for purchase and installation of ground cover, shrubbery, plants, and trees as specified by the City of Franklin Building & Neighborhood Services Department.
   b. This Item is intended to pay the Contractor for furnishing and installing all landscaping facilities specified by the City of Franklin Building & Neighborhood Services Department.
   c. Measurement: Measurement for Work performed under this Item when authorized by the Engineer shall be in compliance with the provisions of Section 01035 as determined by the Engineer.
   d. Payment: Payment for Work performed under this Item when authorized by the Engineer shall be in compliance with the provisions of Section 01035 as determined by the Engineer.

© 2017 CDM Smith
All Rights Reserved

6. Allowance Item No. 6
   a. Allowance for improvements to, and refurbishment of, the remaining ABW Filter as needed.
   b. This item is intended to pay the Contractor for costs to inspect the existing equipment at the remaining ABW Filter, and to make improvements or refurbishments based on the results of the inspection. This item does not include removal or replacement of the filter media, which is included in Bid Item N.
   c. Measurement: Measurement for Work performed under this Item when authorized by the Engineer shall be in compliance with the provisions of Section 01035 as determined by the Engineer.
   d. Payment: Payment for Work performed under this Item when authorized by the Engineer shall be in compliance with the provisions of Section 01035 as determined by the Engineer.

7. Allowance Item No. 7
   a. Allowance for materials testing per Section 01410.
   b. This item is intended to pay the Contractor for the cost of an Independent Testing Laboratory as required by Section 01410.
   c. Measurement: Measurement shall be based on the actual hours incurred and the actual number of tests performed by the Independent Testing Laboratory.
   d. Payment: Payment shall be made at the actual cost invoiced by the Independent Testing Laboratory.

8. Allowance Item No. 8
   a. Allowance for Middle Tennessee Electrical Membership Corporation (MTEMC) fees.
   b. This item is intended to pay the Contractor for MTEMC's fees to install new, permanent electric service. The fees will be negotiated with MTEMC.
   c. Measurement: Measurement shall be based on the scope of work quoted by MTEMC.
   d. Payment: Payment shall be made at the actual cost invoiced by MTEMC.

3.04 ADDITIVE AND DEDUCTIVE ALTERNATES FOR BID

A. The Bidder may complete the following Additive or Deductive Alternates in Part 4 of the Bid Form. The Owner, and solely the Owner, will determine if these Additive or Deductive Alternates will be accepted, and the Contract Price will be adjusted in the amount of the Additive or Deductive Alternates accepted by the Owner, after the award of the Contract. The Bidder shall be bound to accept the Additive or Deductive Alternates selected by the Owner, and the Owner is in no way bound to accept the Additive or Deductive Alternates.

The Additive or Deductive Alternate includes selling and delivering to the Owner all necessary material, equipment, and supplies, including installation of all material, equipment, supplies, all other labor, permit fees, taxes, insurance, other miscellaneous costs, overhead and profit, except for those costs specifically included in other Bid Items. All requirements of the Contract Documents shall be met by the Additive or Deductive Alternate.

1. Deductive Alternate A
   a. Lump Sum - Amount to be deducted from Base Bid Item A to neither procure nor install the Jet Mixing System specified in Section 11300 and as shown on the Drawings.
   b. This lump sum includes selling and delivering to the Owner all necessary material, equipment, and supplies, including installation of all material, equipment, supplies, all

other labor, permit fees, taxes, insurance, other miscellaneous costs, overhead and profit, except for those costs specifically included in other Bid Items.

~~B. The Owner may elect to increase the scope of work by selecting the following Additive Alternates. If the Contractor has completed Additive Alternate B, the Owner, and solely the Owner, will determine if these Additive Alternates will be accepted, and the Contract Price will be adjusted in the amount of the Additive Alternates accepted by the Owner, after the award of the Contract. The Contractor shall be bound to accept the Additive Alternates selected by the Owner, and the Owner is in no way bound to accept the Additive Alternates. If Additive Alternate B is not completed in the Bid Form, then the Owner will not accept Additive Alternate A.~~

~~1. Additive Alternate A~~ **(NOT IN CONTRACT)**

~~a. Lump Sum – Amount to be added to Base Bid Item A to procure the Solar Sludge Drying System specified in Section 13265 and as shown on the Drawings.~~

~~b. This lump sum includes only the purchase price of the equipment and the manufacturer's services defined in Section 13265, Appendix A. Construction of the solar sludge dryer system foundation, related equipment, installation, electrical and instrumentation work, site work, testing, and making the system ready for continuous, uninterrupted service are provided under Additive Alternate B below.~~

~~c. Measurement: Shall be in accordance with the accepted Schedule of Values.~~

~~d. Payment: Progress payments shall be based on the actual percentage of Work satisfactorily completed during the progress payment period in accordance with the approved Schedule of Values.~~

~~2. Additive Alternate B~~ **(NOT IN CONTRACT)**

~~a. Lump Sum – Amount to be added to Base Bid Item A to install, complete and ready for operation, the Solar Sludge Drying System specified in Section 13265 and as shown on the Drawings.~~

~~b. This Additive Alternate includes selling and delivering to the Owner all necessary material, equipment, and supplies, including installation of all material, equipment, supplies, all other labor, permit fees, taxes, insurance, other miscellaneous costs, overhead and profit, except for those costs specifically included in other Bid Items.~~

~~c. Measurement: Shall be in accordance with the accepted Schedule of Values.~~

~~d. Payment: Progress payments shall be based on the actual percentage of Work satisfactorily completed during the progress payment period in accordance with the approved Schedule of Values.~~

END OF SECTION

© 2017 CDM Smith
All Rights Reserved

SECTION 02050
DEMOLITION AND MODIFICATIONS

PART 1 GENERAL

1.01 SCOPE OF WORK

A. Furnish all labor, materials, equipment and incidentals required and demolish, modify, remove and dispose of work shown on the Drawings and as specified herein.

B. Included, but not limited to, are demolition, modifications and removal of existing materials, equipment or work necessary to install the new work as shown on the Drawings and as specified herein and to connect with existing work in approved manner.

C. Demolition, modifications and removals which may be specified under other Sections shall conform to requirements of this Section.

D. Demolition and modifications include:

1. Complete demolition of the old aeration basins and clarifiers 1 & 2.

2. Complete demolition of clarifiers 3 & 4 and the existing flow control building southeast of these clarifiers.

3. Complete demolition of two of the three existing tertiary filter beds. This includes modifications to the single remaining filter bed to keep it in service.

4. Complete removal of the settled water junction box. The box shall be demolished to a depth of 18 inches below the existing ground elevation.

5. Complete demolition of Sludge Storage Tanks 1 & 2.

6. Complete demolition of DAF Tanks 1 & 2.

7. Complete demolition of the Belt Filter Press Feed Tank.

8. Complete demolition of the ATAD Reactor Tanks (3 each).

9. Complete demolition of the existing headworks facility including surrounding shallow foundations.

10. Partial demolition of the clarifier distribution box for hydraulic improvements.

11. Complete demolition of the RAS distribution box.

12. Complete demolition of the existing BNR Basin distribution box.

13. Abandonment or partial removal of various yard pipes.

E. Complete demolition shall be understood to include complete removal of the associated foundation(s) as well.

© 2017 CDM Smith
All Rights Reserved

F. Blasting and the use of explosives will not be permitted for any demolition work.

1.02 RELATED WORK

A. Summary of Work is included in Section 01010.

B. Construction Sequence and Maintenance of Plant Operations is included in Section 01014.

C. Submittals are included in Section 01300.

D. Construction Schedule is included in Section 01310.

E. Clearing is included in Section 02100.

F. Excavation and Backfill is included in Section 02200.

G. Environmental Protection is included in Section 02270.

1.03 SUBMITTALS

A. Submit, in accordance with Section 01300, six copies of proposed methods and operations of demolition of the structures and modifications prior to the start of work. Include in the schedule the coordination of shutoff, capping and continuation of utility service as required.

B. Submit, in accordance with Section 01300, six copies of a pre-demolition hazardous materials survey prior to scheduling demolition work on structures to be demolished.

C. Submit qualifications for the asbestos and lead based paint inspection professionals. Including resumes, licensing, and certifications for the firm and the individuals to perform the work.

D. Submit, in accordance with Paragraph 3.01D of this Section, an asbestos and lead-based paint survey report for review by the Engineer.

E. If asbestos or lead based paint remediation/removal is necessary, submit qualifications for the remediation contractor and the personnel the remediation contractor proposes to use for this work. Information on the remediation contractor shall include, at a minimum, firm licensing, certifications, and resume. Information on the proposed personnel shall include, at a minimum, resumes, certifications, 40 hour training certificates, lead and asbestos training certificates and medical certifications.

F. If asbestos or lead based paint remediation/removal is necessary, submit the proposed remediation plan for review by the Engineer.

G. Furnish a detailed sequence of demolition and removal work to ensure the uninterrupted progress of the Owner's operations. Sequence shall be compatible with sequence of construction and shutdown coordination requirements as specified in Section 01014.

H. Before commencing demolition work, all modifications necessary to bypass the affected structure shall be completed. Actual work shall not begin until the Engineer has inspected and approved the modifications and authorized commencement of the demolition work in writing.

© 2017 CDM Smith
All Rights Reserved

1.04 JOB CONDITIONS

A. Protection

1. Execute the demolition and removal work to prevent damage or injury to structures, occupants thereof and adjacent features which might result from falling debris or other causes, and so as not to interfere with the use, and free and safe passage to and from adjacent structures.

2. Closing or obstructing of roadways, sidewalks and passageways adjacent to the work by the placement or storage of materials will not be permitted and all operations shall be conducted with a minimum interference to traffic on these ways.

3. Erect and maintain barriers, lights, sidewalk sheds and other required protective devices.

B. Scheduling

1. Carry out operations so as to avoid interference with operations and work in the existing facilities.

C. Notification

1. At least 48 hours prior to commencement of a demolition or removal, notify the Engineer in writing of proposed schedule thereof. Owner shall inspect the existing equipment and to identify and mark those items which are to remain the property of the Owner. No removals shall be started without the permission of the Engineer.

D. Conditions of Structures

1. The Owner and the Engineer assume no responsibility for the actual condition of the structures to be demolished or modified.

2. Conditions existing at the time of inspection for bidding purposes will be maintained by the Owner insofar as practicable. However, variations within a structure may occur prior to the start of demolition work.

E. Repairs to Damage

1. Promptly repair damage caused to adjacent facilities by demolition operation when directed by Engineer and at no additional cost to the Owner. Repairs shall be made to a condition at least equal to that which existed prior to construction.

F. Traffic Access

1. Conduct demolition and modification operations and the removal of equipment and debris to ensure minimum interference with roads, streets, walks both onsite and offsite and to ensure minimum interference with occupied or used facilities.

2. Special attention is directed towards maintaining safe and convenient access to the existing facilities by plant personnel and plant associated vehicles.

© 2017 CDM Smith
All Rights Reserved

3. Do not close or obstruct streets, walks or other occupied or used facilities without permission from the Engineer. Furnish alternate routes around closed or obstructed traffic in access ways.

1.05 RULES AND REGULATIONS

A. The Building Code of the City of Franklin, Tennessee shall control the demolition, modification or alteration of the existing buildings or structures.

B. No building or structure, or any part thereof, shall be demolished until an application has been filed with the Building Inspector and a permit issued. The fee for this permit shall be the Contractor's responsibility.

1.06 REFERENCES

A. U.S. Environmental Protection Agency's (EPA) National Emission Standards for Hazardous Air Pollutants: Asbestos (Asbestos NESHAP) (40 Code of Federal Regulations (CFR) Part 61, Subpart M)

B. EPA's Resource Conservation and Recovery Act (RCRA) Standard for Maximum Concentration of Contaminants for Hazardous Waste Characterization

C. Federal Occupational Safety and Health Administration (OSHA) Asbestos Standard for the Construction Industry (29 Code of Federal Regulations (CFR) Part 1926, Subpart Z, Standard 1926.1101)

D. Tennessee Department of Environment & Conservation (TDEC), Division of Air Pollution Control (APC)

1.07 DISPOSAL OF MATERIAL

A. Salvageable material and equipment listed hereinafter shall become the property of the Owner. Dismantle all such items to a size that can be readily handled and deliver them to a designated storage area.

B. The following materials and items of equipment shall remain the property of the Owner and stored where directed on the site. Any such material damaged due to improper handling will not be accepted and the replacement value of the material deducted from the payment to the Contractor.

1. ABW Filters
   a. Two (2) surface wash pumps and control panels.
   b. Two (2) backwash pumps.
   c. Three (3) transfer pumps.

2. UV Disinfection System
   a. Entire system including modules, lamps, ballasts, reaction chambers, power distribution centers, hydraulic systems centers, module removal mechanisms, and control panels. Attention is directed to the presence of mercury in the UV lamps.

3. Sludge Control Building

© 2017 CDM Smith
All Rights Reserved

a. Two (2) belt filter presses.
b. One (1) belt conveyor.
c. Three (3) belt filter press feed tank blowers and intake silencers.

4. Blower Building No. 2
   a. Two (2) air compressors.

C. All other material and items of equipment shall become the Contractor's property and must be removed from the site.

D. The storage or sale of removed items on the site will not be allowed.

PART 2 PRODUCTS (NOT USED)

PART 3 EXECUTION

3.01 GENERAL

A. All materials and equipment removed from existing work shall become the property of the Contractor, except for those which the Owner has identified and marked for his/her use. All materials and equipment marked by the Owner to remain shall be carefully removed, so as not to be damaged, cleaned and stored on or adjacent to the site in a protected place specified by the Engineer or loaded onto trucks provided by the Owner.

B. Dispose of all demolition materials, equipment, debris and all other items not marked by the Owner to remain, off the site and in conformance with all existing applicable laws and regulations.

C. Pollution Controls

1. Use water sprinkling, temporary enclosures and other suitable methods to limit the amount of dust and dirt rising and scattering in the air to the lowest practical level. Comply with governing regulations pertaining to environmental protection.
   a. Do not use water when it may create hazardous or objectionable conditions such as ice, flooding and pollution.
   b. Clean adjacent structures, facilities, and improvements of dust, dirt and debris caused by demolition operations. Return adjacent areas to conditions existing prior to the start of the work.

D. Asbestos and Lead-Based Paint Surveying

1. Before commencement of any demolition work, the Contractor shall perform asbestos and lead-based paint (LBP) surveys on structures to be demolished. The surveys shall be performed as noted below. Refer to Table 02050-A at the end of this Section for a list of structures to be demolished and their dates of construction.

2. Pursuant to Federal EPA and OSHA regulations, an asbestos survey shall be performed for structures all structures to be demolished. The asbestos survey shall be performed by a TDEC Accredited Asbestos Professional. The asbestos survey shall determine if asbestos containing material (ACM) exists, and the type, location, approximate quantity, and condition of suspected ACM. Samples shall be analyzed for asbestos using polarized light

© 2017 CDM Smith
All Rights Reserved

microscopy (PLM) by an accredited laboratory under the National Voluntary Laboratory Accreditation Program (NVLAP) which is administered by the National Institute of Standards and Technology (NIST).

3. The LBP survey shall be performed by a TDEC Certified LBP Inspector using an X-ray fluorescence (XRF) lead paint analyzer. The inspector shall collect and analyze paint chip samples to confirm lead levels as determined by the XRF. Samples shall also be collected of loose paint chips and analyzed for TCLP lead for disposal purposes. The LBP survey shall be conducted pursuant to applicable Federal, State, and local regulations as well as ASTM E2052-99 Standard Guide for Evaluation, Management, and Control of Lead Hazards in Facilities and ASTM E2120-00 Standard Practice for the Performance Evaluation of the Portable X-Ray Fluorescence Spectrometer for the Measurement of Lead in Paint Films.

4. The asbestos and lead paint inspector shall produce a report that at a minimum:
   a. Describes the survey approach and methods,
   b. Describes the survey findings. In addition to the general findings, the report shall map the ACM and LBP locations on historical drawings, identify approximate quantities, provide photographs, establish the types, and establish the conditions of the identified lead paint and ACM.
   c. Evaluate the findings against regulatory thresholds, including thresholds that would trigger removal prior to demolition, landfill contaminant level thresholds, and landfilling requirements.
   d. If crushing and reuse of concrete is proposed, selling of metals for scrap, or other reuse is proposed, the report must also evaluate the results against and regulatory thresholds associated with the proposed reuse of materials. The Owner reserves the right to prohibit reuse of materials if additional remedial cost is required to allow reuse.
   e. Present a summary of the results and recommendations for management of ACM and lead paint prior to demolition, if applicable.
   f. The report shall contain appendices with the laboratory results, any onsite testing results, PLM results and XRF results.

5. Demolition work shall not begin until any required remediation work is completed. If remediation of ACM or LBP is required, it shall be performed as a change order to this contract. ACM and/or LBP remediation/removal shall be performed by a Tennessee licensed remedial contractor. The contractor must be approved by the Engineer.

6. If remediation/removal of ACM or LBP is required, a remediation/removal plan must be prepared as a change order to this contract. The professional who will develop the remediation/removal plan must be approved by the Engineer.

7. While ACM and/or LBP may or may not be present, the Contractor shall allocate time in the schedule for preparation and review of the remediation plan and remediation of ACM or LBP.

E. Building Demolition

1. Unless otherwise approved by Engineer, proceed with demolition from the top of the structure to the ground. Complete demolition work above each floor or tier before disturbing supporting members of lower levels.

© 2017 CDM Smith
All Rights Reserved

2. Demolish concrete and masonry in small sections.

3. Remove structural framing members and lower to ground by means of hoists, derricks, or other suitable methods.

4. Break up and remove foundations and slabs-on-grade, unless otherwise shown to remain.

5. Locate demolition equipment throughout the structure and remove material so as to not impose excessive loads to supporting walls, floors or framing.

3.02 STRUCTURAL REMOVALS

A. Remove structures to the lines and grades shown unless otherwise directed by the Engineer. Where no limits are shown, the limits shall be 4-in outside the item to be installed. The removal of masonry beyond these limits shall be at the Contractor's expense and these excess removals shall be reconstructed to the satisfaction of the Engineer with no additional compensation to the Contractor.

B. All concrete, brick, tile, concrete block, roofing materials, reinforcement, structural or miscellaneous metals, plaster, wire mesh and other items contained in or upon the structure shall be removed and taken from the site, unless otherwise approved by the Engineer. Demolished items shall not be used in backfill adjacent to structures or in pipeline trenches.

C. After removal of parts or all of masonry walls, slabs and like work which tie into new work or existing work, the point of junction shall be neatly repaired so as to leave only finished edges and surface exposed.

D. In the existing Sludge Control Building, the equipment pads shall be removed and the floors patched with non-shrink grout.

3.03 MECHANICAL REMOVALS

A. Mechanical removals shall consist of dismantling and removing of existing septic systems, piping, ductwork, pumps, motors, equipment and other appurtenances as specified, shown, or required for the completion of the work. It shall include cutting, capping, and plugging as required, except that the cutting of existing piping for the purpose of making connections thereto will be included under Division 15.

B. Existing process, water, chemical, gas, fuel oil and other piping and ductwork not required for the new work shall be removed where shown or where it will interfere with new work. Piping or ductwork not indicated to be removed or which does not interfere with new work shall be removed to the nearest solid support, capped and left in place. Chemical and fuel lines and tanks shall be purged and made safe prior to removal or capping. Where piping or ductwork that is to be removed passes through existing walls, it shall be cut off and properly capped on each side of the wall.

C. When underground piping or ductwork is to be altered or removed, the remaining piping or ductwork shall be properly capped. Abandoned underground piping may be left in place unless it interferes with new work or is shown or specified to be removed.

© 2017 CDM Smith
All Rights Reserved

D. Waste and vent piping shall be removed to points shown. Pipe shall be plugged with cleanouts and plugs. Where vent stacks pass through an existing roof that is to remain, they shall be removed and the hole in the roof properly patched and made watertight.

E. Any changes to potable water piping and other plumbing and heating system work shall be made in conformance with all applicable codes and under the same requirements as other underground piping. All portions of the potable water system that have been altered or opened shall be pressure tested and disinfected in accordance with Section 01445 and local codes. Other plumbing piping and heating piping shall be pressure tested only.

3.04 ELECTRICAL REMOVALS

A. Electrical removals shall consist of the removal of existing transformers, distribution switchboards, control panels, motors, conduits and wires, poles and overhead wiring, panelboards, lighting fixtures and miscellaneous electrical equipment all as shown on the Drawings, specified herein, or required to perform the work.

B. All existing electrical equipment and fixtures to be removed shall be removed with such care as may be required to prevent unnecessary damage, to keep existing systems in operation and to maintain the integrity of the grounding systems.

C. Conduits and wires shall be abandoned or removed where shown. All wires in abandoned conduits shall be removed, salvaged and stored. Abandoned conduits concealed in floor or ceiling slabs or in walls, shall be cut flush with the slab or wall at the point of entrance. The conduits shall be suitable plugged and the area repaired in a flush, smooth and approved manner. Exposed conduits and their supports shall be disassembled and removed from the site. Repair all areas of work to prevent rust spots on exposed surfaces.

D. Where shown or otherwise required, wiring in the underground duct system shall be removed. All such wiring shall be salvaged and stored as specified. Verify the function of all wiring before disconnection and removing it. Ducts which are not to be reused shall be plugged where they enter buildings and made watertight.

E. Where shown, direct-burial cable shall be abandoned. Such cable shall be disconnected at both ends of the run. Where it enters a building or structure the cable shall be cut back to the point of entrance. All opening in buildings for entrance of abandoned direct-burial cable shall be patched and made watertight.

F. Poles and overhead wiring shall be abandoned as shown and specified. Existing substation and poles owned by the power company will be removed by the power company. Poles not owned by the power company shall be completely removed from the site. The overhead wires shall be salvaged and stored. Perform this work after the proposed service has been completed and energized, and in accordance with the approved schedule.

G. Lighting fixtures shall be removed or relocated as shown. Fixtures not relocated shall be removed from the site. Relocated fixtures shall be carefully removed from their present location and rehung where shown.

H. Wall switches, receptacles, starters and other miscellaneous electrical equipment, shall be removed and disposed of off the site as required. Care shall be taken in removing all equipment

© 2017 CDM Smith
All Rights Reserved

so as to minimize damage to architectural and structural members. Any damage incurred shall be repaired.

3.05 CLEAN-UP

A. Remove from the site all debris resulting from the demolition operations as it accumulates. Upon completion of the work, all materials, equipment, waste and debris of every sort shall be removed and premises shall be left, clean, neat and orderly.

TABLE 02050-A
STRUCTURES TO BE DEMOLISHED AND DATES OF CONSTRUCTION

Structure	Reference Drawing	Date of Construction
Old aeration basins	C-13	1973
Clarifiers 1 & 2	C-12, C-14	1973
Clarifiers 3 & 4	C-13, C-15	1990
Flow control building southeast of clarifiers 3 & 4	C-13	1990
Two of three existing tertiary filter beds	C-12	1997
Finished sludge pumping station	C-16	1995
Finished sludge storage tanks 1 & 2	C-14	1990
DAF tanks 1 & 2	C-14	1990
Belt filter press feed tank	C-14	1990
ATAD reactor tanks (3 each)	C-14	1995
Existing headworks facility + grit tanks 1 & 2	C-15	1990, 1997
RAS distribution box	C-17	1997
Chlorine contact tank #1	C-12	1973
Chlorine contact tank #2	C-12	1990
Abandoned pump station west of chlorine contact tank #1	C-12	1973
Micro screen building	C-12	1973
Return sludge pump station	C-13	1973
Excess flow basins 1 & 2	C-13, C-15	1990
Odor control equipment buildings	C-14	2001
Chemical storage	C-14	1995
Thickened sludge pumping station	C-16	1995
Thickened sludge storage tank	C-14	1995
Blower building no. 1	C-15	1990
Oxidation basin distribution box	C-17	1997

END OF SECTION

© 2017 CDM Smith
All Rights Reserved

THIS PAGE INTENTIONALLY LEFT BLANK

© 2017 CDM Smith
All Rights Reserved

SECTION 02630
STORM DRAINAGE UTILITIES

PART 1 - GENERAL

1.01 SCOPE OF WORK

A. This work shall include installing storm sewer pipe and connecting to storm sewer structures.

B. This work shall include constructing manholes, catch basins, inlets, and pipe end walls structures to storm sewer pipe.

C. Section includes

1. Storm drainage piping, fittings, and accessories

2. Storm drainage manholes, catch basins, inlets, and pipe end walls and accessories

1.02 RELATED WORK

A. Trenching, Backfilling and Compaction is included in Section 02221.

B. Granular Materials is included in Section 02230.

C. Precast Concrete Manholes and Structures are included in Section 02605.

D. Cast-In-Place Concrete is included in Section 03300.

1.03 REFERENCES

A. American Association of State Highway and Transportation Officials (AASHTO)

1. M36: Corrugated Steel Pipe, Metallic-Coated, for Sewers and Drains

2. M198: Standard Specification for Joints for Concrete Pipe, Manholes, and Precast Box Sections Using Preformed Flexible Joint Sealants

3. M207: Standard Specifications for Elliptical Culvert, Storm Drain, and Sewer Pipe

4. M274: Standard Specification for Steel Sheet, Aluminum-Coated (Type 2), for Corrugated Steel Pipe

B. American Society of Testing and Materials (ASTM)

1. A48: Standard Specification for Gray Iron Castings

2. A123: Standard Specification for Zinc (Hot-Dip Galvanized) Coatings on Iron and Steel Products

3. A536: Standard Specification for Ductile Iron Castings

© 2017 CDM Smith
All Rights Reserved

4. A929: Standard Specification for Steel Sheet, Metallic-Coated by the Hot-Dip Process for Corrugated Steel Pipe

5. C32: Standard Specification for Sewer and Manhole Brick (Made From Clay or Shale)

6. C76: Sewer Pipe

7. C139: Standard Specification for Concrete Masonry Units for Construction of Catch Basins and Manholes

8. C150: Standard Specification for Portland Cement

9. C207: Standard Specification for Hydrated Lime for Masonry Purposes

10. C361: Standard Specification for Reinforced Concrete Low-Head Pressure Pipe

11. C443: Standard Specification for Joints for Concrete Pipe and Manholes, Using Rubber Gaskets

12. C478: Standard Specification for Precast Reinforced Concrete Manhole Sections

13. C506: Standard Specifications for Reinforced Concrete Arch Culvert, Storm Drain, and Sewer Pipe

14. C507: Standard Specifications for Reinforced Concrete Elliptical Culvert, Storm Drain, and Sewer Pipe

15. C890: Standard Practice for Minimum Structural Design Loading for Monolithic or Sectional Precast Concrete Water and Wastewater Structures

16. C923: Standard Specification for Resilient Connectors Between Reinforced Concrete Manhole Structures, Pipes, and Laterals

17. C990: Standard Specification for Joints for Concrete Pipe, Manholes, and Precast Box Sections Using Preformed Flexible Joint Sealants

C. Tennessee Department of Transportation (TDOT)

1. Standard Specifications for Road and Bridge Construction, latest edition, applicable sections to Scope of Work

D. Local Municipality

1. City of Franklin Transportation and Street Technical Standards

1.04 SUBMITTALS

A. Product Data: Submit data on pipe, fittings, and accessories.

B. Manufacturer's Installation Instructions: Submit special procedures required to install products specified.

© 2017 CDM Smith
All Rights Reserved

C. Submit compaction test results.

D. Submit the following in accordance with Section 01300.

1. Shop drawings for precast concrete structures: Indicate locations, dimensions, configuration, thicknesses, elevations, sizes, and penetration elevations

2. Product Data

a. Brick: Material product data

b. Castings: Material product data

c. Concrete: Aggregate, cement, and admixtures product data

3. Certificates: Manufacturer's certificate stating the product meets or exceeds specified requirements

4. Project Record Documents: Provide record drawings for actual pipe run locations, connections, structures, and invert elevations.

5. Test results

1.05 CLOSE-OUT SUBMITTAL

A. Comply with Section 01700 and 01720 requirements.

1. Accurately record actual locations for pipe runs, connections, and invert elevations.

2. Identify and describe unexpected variations to subsoil conditions or discovery of uncharted utilities.

1.06 DELIVERY STORAGE AND HANDLING

A. Comply with Section 01600 requirements.

PART 2 - PRODUCTS

2.01 REINFORCED CONCRETE PIPE

A. Pipe: ASTM C76, Class III, Wall Type B unless noted otherwise, nominal inside diameter as indicated

B. End Joints: Tongue and groove. Seal all joints during the same day the pipe is laid. Construct the joints so a watertight joint will result.

1. Soil Tight: ASTM C990, AASHTO M198, preformed flexible joint sealant

2. Water Tight: ASTM C443, rubber compression gasket

3. Low-Pressure Application: ASTM C361

© 2017 CDM Smith
All Rights Reserved

2.02 MANHOLES, CATCHBASINS, INLETS, AND PIPE END WALLS STRUCTURES

A. Precast or cast-in-place drainage structures

B. Use TDOT specifications

2.03 PIPE CONNECTIONS

A. Connections between drainage structures and pipe, ASTM C923

1. For storm drains 42-inch diameter and smaller, grout pipe at manhole to form a watertight connection.

2. For storm drains larger than 42-inch diameter, grout 4 feet spool piece into place on manhole. Connect pipe to spool piece using flexible connection.

2.04 PRECAST STRUCTURES

A. Manhole Sections: Reinforced precast concrete in accordance with ASTM C478, with resilient connectors complying with ASTM C923

B. Invert shapes shall conform uniformly to inlet and outlet pipes with a smooth and uniform finish.

C. Joints: ASTM C443, watertight

2.05 CAST-IN-PLACE STRUCTURES

A. Materials

1. Concrete: Section 03300, minimum 4,500 psi compressive strength

2. Portland cement: ASTM C150, Type II

3. Hydrated lime: ASTM C207, Type S

4. Sand: ASTM C33, fine aggregate, except all passes No. 8 sieve

5. Water: Potable, not detrimental to concrete

6. Brick: ASTM C32, grade MS, maximum 8 percent absorption computed from 5-cycle average

B. Components

1. Bases: Cast-in-place concrete, one piece, as indicated

2. Walls: Brick

3. Frames and Grates: As indicated and specified

C. Mixes

© 2017 CDM Smith
All Rights Reserved

1. Concrete: Section 03300

2. Mortar for Brickwork: Mix Portland cement, hydrated lime and sand.

    a. Sand volume is not to exceed three times sum of cement and lime volumes.

    b. Proportion cement and lime as directed.

    c. Cement to lime proportions may vary between 1 part cement to 1/4 part lime for dense hard burned brick and 1 part cement to 3/4 part lime for softer brick.

    d. Generally mix mortar in proportion of 1 part cement to 1/2 part lime to 4-1/2 parts sand.

    e. Use sufficient water to form a workable mixture.

2.06 END WALLS

A. Concrete End Wall: Comply with TDOT Specifications Section 611, Walls and Base: Cast-in-place concrete or precast

2.07 MIXES

A. Mortar for Plugging Lift Holes: Mix Portland cement and sand, 1 part cement to 1/2 part sand, with sufficient water to make mortar damp without “balling.”

2.08 COMPONENTS

A. Frame and Cover

1. ASTM A48/A48M, Class 30 cast iron construction or ASTM A536, Grade 65-45-12 ductile iron construction

2. Machined flat bearing surface, removable lid, rated for AASHTO HS20-44 loading unless noted otherwise

3. Castings shall be as follows:

    a. Free from scale, lumps, blisters, and sand holes

    b. Machine contact surfaces to prevent rocking

    c. Thoroughly clean and hammer inspect

B. Manhole Steps: ASTM C478

PART 3 - EXECUTION

3.01 EXAMINATION

A. Section 01400 –- Verify existing conditions before starting work.

© 2017 CDM Smith
All Rights Reserved

B. Underground Service Alert Requirements: Comply with Underground Utility Damage Prevention Act of Tennessee requirements for notification prior to excavation. Contact Tennessee 811 at (800) 351-1111 (or dial 811) no less than 3 working days and no more than 10 working days prior to starting exploratory excavation. Verify whether or not a representative from each utility or agency will be present during excavation and coordinate with said individual(s). Take any precautions required by the utility owner.

C. Verify that the trench cut and/or excavation base is ready to receive work and that excavations, dimensions, and elevations are as indicated on Drawings.

D. Verify that the storm sewer drainage structure excavation is ready to receive work and that excavations, dimensions, and elevations are as indicated on Drawings.

3.02 PREPARATION

A. Remove large stones or other hard matter which could damage piping or impede consistent backfilling or compaction.

B. Do not lay pipe in water or in frozen bedding conditions.

3.03 EXCAVATION

A. See Section 02221 for additional requirements.

B. Hand trim excavation to accurately place storm sewer structures and pipes to indicated elevations.

3.04 PIPE INSTALLATION

A. 12” layer of No. 57 crushed stone bedding shall be installed on prepared subgrade.

B. Begin laying pipe from lowest point.

C. Inspect pipe for cracks or defects, clean any debris from interior and bell end and remove undesirable material from gasket and gasket recess.

D. Lay pipe uniformly to line and grade so finished culvert will present uniform bore.

E. As work progresses, clean all pipe interiors in place.

F. Lift or roll pipe into position. Do not drop or drag pipe over prepared bedding.

G. Shore pipe to required position; retain in place until adjacent fills have been installed. Ensure pipe remains in correct position and to required slope.

H. Install cover at sides and over top of pipe.

I. Backfill and compact in accordance with Section 02221.

J. Install culvert end structures.

© 2017 CDM Smith
All Rights Reserved

3.05 PIPE ENDS

A. Place fill at pipe ends, as indicated on Drawings.

B. Installed thickness: 8 inches

3.06 PRECAST STRUCTURES

A. Provide a minimum of 6 inches of No. 57 crushed stone bedding.

B. Place manhole or inlet sections plumb and level on prepared bedding.

C. Orient manhole or inlet to allow for connection with pipe.

3.07 CAST-IN-PLACE STRUCTURES

A. Brickwork

1. Bricks

a. Do not construct brick masonry in freezing weather or when the bricks contain frost.

b. All brick and foundation shall be thoroughly cleaned.

c. Moisten bricks to prevent water absorption from mortar. Limit moisture to prevent bricks from becoming slippery during placement.

d. Lay each brick in full mortar bed and joint without requiring subsequent grouting, flushing or filling; bond thoroughly.

B. Plastering and Curing Brick Masonry

1. Plaster outside faces with mortar not less than 1/2-inch thick.

2. Moisten brick masonry before applying mortar, if required.

3. Carefully spread and trowel plaster.

4. Check for bond and soundness after hardening, by tapping.

5. Remove and replace unbonded and unsound plaster.

6. Protect from too rapid drying by using moist burlap or other accepted means.

7. Protect from weather and frost.

C. Provide a minimum of 6 inches of No. 57 crushed stone bedding.

D. Orient manhole to allow for connection with pipe.

E. Form and place cast-in-place concrete base pad.

© 2017 CDM Smith
All Rights Reserved

F. Construct walls around storm drainage pipe sections to prevent leakage.

G. Establish top elevation and mount frame and cover.

H. Mount frame level in grout, secured to top cone section.

I. Setting Frames, Grates, and Curb Inlets

1. Set inlets and frames with tops conforming accurately to finished ground or pavement surface as indicated and directed.

2. Set circular frames concentric with top of masonry.

3. Set frames in full mortar bed to fill and make watertight completely the space between top of masonry and the frame's bottom flange.

4. Place a thick mortar ring extending to the outer masonry edge, around bottom flange. Finish mortar smoothly and give a slight slope to shed water away from the frame.

5. Place grates in the frames after completing all other work at the structure.

3.08 ERECTION TOLERANCES

A. Section 01400 – Quality Requirements: Tolerances

B. Lay pipe to alignment and slope gradients noted on Drawings with maximum variation from indicated slope of 1/8 in 10 feet.

C. Maximum variation from intended culvert invert elevation: 1/2 inch

D. Maximum pipe offset from indicated alignment: 1 inch

E. Maximum variation in structure profile from intended position: 1 percent

3.09 FIELD QUALITY CONTROL

A. Section 01400 – Quality Requirements

B. Request inspection prior to and immediately after placing aggregate cover over pipe.

C. Refer to Section 02221 for additional compaction requirements.

D. When tests indicate work does not meet specified requirements, remove work, replace and retest.

E. Test frequency: As determined by Engineer.

F. Pipe Displacement Test

1. Engineer will test pipe for displacement after trench has been backfilled and compacted and after silt and debris have been cleaned from the pipe.

© 2017 CDM Smith
All Rights Reserved

2. Engineer will visually inspect pipe. Pipes not presenting a uniform bore due to displacement and misalignment shall be replaced.

3.10 DISPOSAL OF EXCESS EXCAVATED MATERIALS

A. Dispose of excavated materials off-site in permitted sites in non-wetland areas and above the 100-year, Federal Emergency Management Agency floodplain.

B. Waste disposal areas shall not affect any state/U.S. waters unless these areas are specifically covered by a Contractor obtained ARAP, 404, or NPDES permit.

3.11 PROTECTION

A. Protect structures, pipe, and bedding from damage or displacement until backfilling operation is completed.

3.12 CLOSEOUT ACTIVITIES

A. Provide in accordance with Section 01700.

END OF SECTION

© 2017 CDM Smith
All Rights Reserved

THIS PAGE INTENTIONALLY LEFT BLANK

© 2017 CDM Smith
All Rights Reserved

SECTION 07540
FLUID-APPLIED ELASTOMERIC ROOF COATINGS OVER POLYURETHANE FOAM (PUF)

PART 1 GENERAL

1.01 SCOPE OF WORK

A. This section specifies a fluid-applied elastomeric roof coating which is applied over polyurethane foam (PUF) roof insulation as part of the "roofing system" for the anaerobic digesters.

B. The term "roofing system" means an insulating substrate of sprayed polyurethane foam (as specified in Section 07545) with a top coating of fluid-applied, elastomeric protective coating as specified in this Section.

1.02 RELATED WORK

A. Prestressed Concrete Tanks are included in Section 13205.

B. Digester Gas Safety and Handling Equipment is included in Section 13238.

C. Spray Polyurethane Foam (PUF) for Digester Roofing Systems is included in Section 07545.

1.03 SUBMITTALS

A. Submit, in accordance with Section 01300, shop drawings and description information required to establish compliance with this Section. Submittals shall include the following:

1. The following information shall be provided in accordance with Appendix 5 – Design-Build Review Procedures.
   a. Certificates of Compliance.
   b. Warranty.
   c. Evidence of coating manufacturer's approval of the applicator.
   d. UFCA foam surface texture visual standards.
   e. Mineral granule manufacturer's standard colors.
   f. Operating and Maintenance Data.

1.04 REFERENCE STANDARDS

A. American National Standards Institute (ANSI)

1. ANSI Z87.1 Practice for Occupational and Educational Eye and Face Protection

B. ASTM International (ASTM)

1. ASTM D56 Flash Point by Tag Closed Tester

2. ASTM D93 Flash Point by Pensky-Martens Closed Tester

3. ASTM D412 Rubber Properties in Tension

© 2017 CDM Smith
All Rights Reserved

4. ASTM D471 Rubber Property-Effect on Liquids

5. ASTM D570 (1988) Water Absorption of Plastics

6. ASTM D624 Rubber Property-Tear Resistance

7. ASTM D822 Operating Light- and Water-Exposure Apparatus (Carbon- Arc Type) for Testing Paint and Related Coatings and Materials

8. ASTM D2240 Rubber Property-Durometer Hardness

9. ASTM D2369 Volatile Content of Coatings

10. ASTM D2697 Volume Nonvolatile Matter in Clear or Pigmented Coatings

11. ASTM E 96 Water Vapor Transmission of Materials

12. ASTM G26 Operating Light-Exposure Apparatus (Xenon-Arc Type) With and Without Water for Exposure of Nonmetallic Materials

13. ASTM G53 Operating Light- and Water-Exposure Apparatus (Fluorescent UV-Condensation Type) for Exposure of Nonmetallic Materials

C. Spray Polyurethane Foam Alliance (SPFA)

1. SPFA-104 Polyurethane Foam Contractors Division Guidelines for Spray Polyurethane Foam Systems for New and Remedial Roofing

D. Underwriters Laboratories (UL)

1. UL 790 Fire Tests of Roof Coverings

2. UL BMD Building Materials Directory

E. Where reference is made to one of the above standards, the revision in effect at the time of bid opening shall apply.

1.05 QUALITY ASSURANCE

A. Qualifications of Applicator: The PUF applicator shall be approved by the roof coating manufacturer.

B. Material Certifications: Certificates shall be provided from the manufacturer certifying that materials provided conform to all requirements specified herein, and are chemically and physically compatible with each other and are suitable for inclusion within the total roof system specified herein.

C. Warranty: Furnish the manufacturers' standard warranties for the roofing system. The warranty shall provide, but not be limited to the following:

1. The warranty shall be issued directly to the Owner.

© 2017 CDM Smith
All Rights Reserved

2. The warranty period shall be not less than 10 years from the date of Substantial Completion.

3. The warranty shall cover workmanship and materials including both the roof coating and the polyurethane foam insulation which is specified in Section 07545.

1.06 SYSTEM DESCRIPTION

A. Provide a roofing system for the concrete domes of the two anaerobic digesters, which includes an insulating substrate of sprayed polyurethane foam as specified in Section 07545 with a top coating of fluid-applied, elastomeric protective coating as specified in this Section.

PART 2 PRODUCTS

2.01 ROOF COATING

A. The roof coating shall be Type CB with Type CT top coat.

1. Type CB Coating: Aromatic urethane elastomer (two component). The uncured urethane shall have the following values when tested for the listed properties in accordance with the listed test method:

Property	Value	Test Method
Solids content: percent by volume (minimum)	73	ASTM D2697
Solids content: percent by weight (minimum)	81	ASTM D2369
Flash point: degrees F (minimum).	82	ASTM D56 or ASTM D93

2. The cured aromatic urethane elastomer shall have the following values when tested for the listed properties in accordance with the listed test method:

Property	Value	Test Method
Elongation: percent, at 75 degrees F and 50 percent relative humidity (minimum).	400 (base coat) 150 (topcoat)	ASTM D412
Tensile strength: psi, at 75 degrees F and 50 percent relative humidity (minimum).	1600	ASTM D 412
Permanent set: at break, percent	25	ASTM D412
Tear resistance: pounds per linear inch (minimum).	150	ASTM D624 die C
Ultraviolet exposure: 6000 hr in atlas xenon or carbon arc weatherometer, or QUV.	No cracking, checking, loss of flexibility, or significant discoloration	ASTM D822 ASTM G26 ASTM G53

Water absorption: 168 hr, 75 degrees F, weight percent (maximum).	2.0	ASTM D471
Durometer hardness: Shore A (minimum)	60	ASTM D2240
Permeability: U.S. perm (maximum)	1.0	ASTM E96 Procedure B″

3. Type CT Coating: Aliphatic urethane elastomer (two component). The uncured urethane shall have the following values when tested for the listed properties in accordance with the listed test method:

Property	Value	Test Method
Solids content: percent by volume (minimum)	55	ASTM D2697
Solids content: percent by weight (minimum)	69	ASTM D2369
Flash point: degrees F (minimum)	71	ASTM D56 or ASTM D 93

4. The cured aliphatic urethane elastomer shall have the following values when tested for the listed properties in accordance with the listed test method:

Property	Value	Test Method
Elongation: percent, at 75 degrees F and 50 percent relative humidity (minimum).	150	ASTM D412
Tensile strength: psi, at 75 degrees F and 50 percent relative humidity (minimum).	1600	ASTM D412
Permanent set: at break, percent	15	ASTM D412
Tear resistance: pounds per linear inch (minimum).	195	ASTM D624 die C
Ultraviolet exposure: 6000 hr in atlas xenon or carbon arc weatherometer, or QUV.	No cracking, checking, loss of flexibility, or significant discoloration	ASTM D822 ASTM G26 ASTM G53
Water absorption: 168 hr, 75 degrees F, weight percent (maximum)	2.8	ASTM D471
Durometer hardness: Shore A (minimum)	80	ASTM D2240
Permeability: U.S. perm (maximum)	1.0	ASTM E96 Procedure B”

© 2017 CDM Smith
All Rights Reserved

2.02 PRIMER

A. The primer shall be as recommended by the coating and foam manufacturers.

2.03 SEALANT

A. The sealant shall be as recommended by the coating manufacturer.

2.04 MINERAL GRANULES

A. Granules for the aggregate surfacing shall be siliceous mineral granules, 98 percent passing the No. 10 sieve and 98 percent retained on the No. 35 sieve. Granules shall be free of fines and dust. A one-color granule surfacing shall be used and the granule color shall be compatible with the color of the topcoat. The color of the granules shall be as selected from the manufacturer's samples and descriptive literature.

2.05 STANDARD COLOR

A. The color for the coating shall be as selected for Type CT. Color range shall be beige to gray.

2.06 FIRE SAFETY

A. The complete roof covering assembly shall have a UL 790, Class A classification, be listed in UL BMD, and have the UL Follow-on Labeling Service.

PART 3 EXECUTION

3.01 DELIVERY AND STORAGE

A. Materials shall be delivered and stored in their original, tightly sealed containers or unopened packages. Storage area shall be weatherproof. Containers and packages shall be clearly labeled with the manufacturer's name, product identification, date of manufacture, shelf-life expiration date, UL labels, and lot number where appropriate. Where materials are covered by a referenced specification, the labels shall bear the specification number, type, and class, as applicable.

3.02 PREPARATION OF SURFACES

A. General: Surfaces to which roof coating is applied shall be free of water, grease, oils, dirt, debris, and other foreign materials, and shall be cured completely. Where foam insulation has been left uncoated overnight, foam shall be removed and new foam applied.

B. Urethane Foam Roof Insulation: The foam shall be of the specified density. Surface of the foam shall be free of ridges, bumps, excessive pinholes, and depressions and shall not exceed visual standards for "orange peel" as defined in SPI PFCD-GSI-4 and by approved samples. Damaged top skin of the insulation shall be repaired with extra brush-coats of coating or sealant. Surfaces of the insulation which become damaged, overexposed to weather, or contaminated such that they cannot be cleaned and repaired to the satisfaction of the coating applicator shall be removed and new insulation provided.

C. Metal, Concrete, and Masonry Surfaces: Rust and scale shall be cleaned from metal surfaces which are to receive roof coatings by abrasive cleaning or wire brushing, followed with a solvent wipe using an industrial solvent such as naphtha or mineral spirits. Concrete and

masonry surfaces which are to receive roof coatings shall be wire- brushed and resulting dust removed.

3.03 APPLICATION

A. General:

1. Roof coatings shall not be applied during inclement weather or when wind speed exceeds 15 mph, unless windscreen devices which ensure application of coatings having the required surface texture and thickness are used. Roof coatings shall not be applied when there is ice, frost, surface moisture, or visible dampness present on the surface to be coated.

2. Prior to applying coating, polyurethane foam shall be checked with a moisture resistance meter to assure that the foam is dry. Roof coating shall be applied between the temperature ranges of 40 and 100 degrees F.

3. Roof coating on urethane foam insulation shall be applied not less than 2 hours after but on the same day as installation of the insulation. Foam shall not be left uncoated overnight. Coating shall be applied on insulation, and continued up walls and roof penetrations to a point where concealed behind counter flashings and up and over the top of parapet walls where specified. Terminal edges of the foam at roof penetrations and roof edges shall be given an extra base coat back 3 inches from the edge. Dry film thickness for each coat shall not be less than specified. Coatings shall be smooth, free of runs, dry spray, or overspray, and provide a uniform film over the foam.

B. Base Coat Application: Type CB coating shall be applied as the base coat. Application shall be in accordance with the manufacturer's printed installation instructions. The coating shall be applied uniformly and in one direction. The completed surface shall be inspected for blowholes, pinholes, cracks, breaks, voids, blisters, and other imperfections, and repaired with base coat material. Areas of the base coat which become dirty shall be cleaned with a clean wet cloth, prior to application of the intermediate coat.

C. Intermediate Coat Application: Type CB coating shall be applied in the same manner as the base coat except it shall be applied in a direction perpendicular to the direction in which the base coat was applied.

D. Topcoat Application: Type CT coating shall be applied as the topcoat in accordance with the manufacturer's printed installation instructions. Coating shall be applied at the specified rate, and in the same manner as the base and intermediate coats except in a direction perpendicular to the direction in which the intermediate coat is applied.

E. Overspray Masking: Masking protection shall be provided as required to protect surfaces and property not to be sprayed.

F. Dry Film Thickness: Minimum Dry Film Thickness (DFT) in mils shall be as follows:

Type	Base coat	Intermediate coat	Topcoat	Total
CB-Urethane	15	15	--	30
CT-Urethane	--	--	15	15

G. Aggregate Surfacing: Where specified, mineral granules shall be spray-applied to the topcoat within 2 to 5 minutes after application of the topcoating, depending on temperature and

© 2017 CDM Smith
All Rights Reserved

humidity, as required by the roof coating manufacturer's printed installation instructions. The spray applicator equipment shall be a sand blaster with output pressure reduced to 10 to 20 psi. The granules shall be applied to the surface evenly at a rate of 50 pounds per 100 square feet. Traffic shall not be allowed on finished areas for 24 hours after granule application is completed.

H. Surfacing: The entire surface of the digester covers shall be surfaced to be suitable for foot traffic.

3.04 FIELD TESTING

A. Prior to application of base coat, one 4-inch-square, flat metal test plate shall be placed on the surface of foam insulation for every 100 square feet for the purpose of measuring wet film thickness of coating during application. During application of intermediate and topcoats, plates shall be placed on surface of previously applied coat in the same manner.

3.05 CLEANUP

A. Roof coating materials shall be cleaned from all surfaces which are not designated to receive such materials. Overspray masking materials and coverings shall be removed upon completion of the spray work. Debris, scraps, waste materials, calibration materials, rubbish and trash from the immediate work area shall be removed at the end of each work day.

END OF SECTION

© 2017 CDM Smith
All Rights Reserved

THIS PAGE INTENTIONALLY LEFT BLANK

© 2017 CDM Smith
All Rights Reserved

SECTION 07545
SPRAYED POLYURETHANE FOAM (PUF)
FOR DIGESTER ROOFING SYSTEM

PART 1 GENERAL

1.01 SCOPE OF WORK

A. This section specifies material and application requirements for sprayed polyurethane foam (PUF) roofing over which a fluid-applied elastomeric protective coating is to be provided.

B. The term "roofing system" means an insulating substrate of sprayed polyurethane foam with a top coating of fluid-applied, elastomeric protective coating as specified in Section 07540.

1.02 RELATED WORK

A. Prestressed Concrete Tanks are included in Section 13205.

B. Digester Gas Safety and Handling Equipment is included in Section 13238.

C. Fluid-Applied Elastomeric Roof Coatings Over Polyurethane Foam (PUF) is included in Section 07540.

1.03 SUBMITTALS

A. Submit, in accordance with Section 01300, shop drawings and description information required to establish compliance with this Section. Submittals shall include the following:

1. Product Data:
   a. Manufacturer's literature including material description, physical properties, recommended storage conditions, shelf life expiration date, application details and instructions, warnings or precautions on flammability and toxicity.
   b. Manufacturers' written recommendations for primers and for surface preparation of galvanized iron or other metal, concrete, or other surfaces.

2. Other Data:
   a. PUF sample installation consisting of one piece, 2 inches thick, 2 feet square, spray applied on plywood. Not less than "orange peel" surface texture as described in SPI PFCD-GSI-4.
   b. Certificate for applicator qualifications.
   c. Manufacturer's certification that materials are physically and chemically compatible and suit the intended purpose. Materials not listed on the certificate will not be permitted in the work area.
   d. Certification of minimum shelf life of PUF material components.

1.04 REFERENCE STANDARDS

A. American National Standards Institute (ANSI)

1. ANSI Z87.1 Practice for Occupational and Educational Eye and Face Protection

B. ASTM International (ASTM)

© 2017 CDM Smith
All Rights Reserved

1. ASTM C177 Steady-State Thermal Transmission Properties by Means of the Guarded Hot Plate

2. ASTM C273 Shear Test in Flatwise Plane of Flat Sandwich Construction of Sandwich Cores

3. ASTM C518 Steady-State Heat Flux Measurements and Thermal Transmission Properties by Means of the Heat Flow Meter

4. ASTM D1621 Compressive Properties of Rigid Cellular Plastics

5. ASTM D1622 Apparent Density of Rigid Cellular Plastics

6. ASTM D1623 Tensile Properties and Tensile Adhesion of Rigid Cellular Plastics

7. ASTM D2126 Response of Rigid Cellular Plastics to Thermal and Humid Aging

8. ASTM D2842 Water Absorption of Rigid Cellular Plastics

9. ASTM D2856 Open Cell Content of Rigid Cellular Plastics by the Air Pycnometer

10. ASTM E96 Water Vapor Transmission of Materials

C. Occupational Safety and Health Administration (OSHA)

1. OSHA 29 CFR Occupational Safety and Health Standards 1910.134

D. Spray Polyurethane Foam Alliance (SPFA)

1. SPFA-104 Polyurethane Foam Contractors Division Guidelines for Spray Polyurethane Foam Systems for New and Remedial Roofing

E. Underwriters Laboratories (UL)

1. UL 790 Fire Tests of Roof Coverings

2. UL BMD Building Materials Directory

F. Where reference is made to one of the above standards, the revision in effect at the time of bid opening shall apply.

1.05 QUALITY ASSURANCE

A. Qualifications of Applicator: The PUF applicator shall be approved by the roof coating manufacturer.

B. Test Area: Apply the PUF roofing system in a designated test area of not less than 50 square feet to confirm conformance with applicable roofing details; requirements of foam adhesion, and adhesion of the roof coating to the foam.

C. Warranty: The roofing system, including the polyurethane foam insulation and roof coating, shall be covered by the roof coating manufacturers' standard warranty, in accordance with Section 07540.

D. Prior to starting the application of roofing system, conduct pre-roofing conference with Contractor, applicator, and Engineer, to demonstrate a thorough understanding of requirements.

1.06 SYSTEM DESCRIPTION

A. Provide a roofing system for the concrete domes of the two anaerobic digesters, which includes an insulating substrate of sprayed polyurethane foam with a top coating of fluid-applied, elastomeric protective coating as specified in Section 07540.

PART 2 PRODUCTS

2.01 MATERIALS

A. Physical Characteristics: The PUF is a two-part component system made by combining an isocyanate (A) component with a polyol (B) component. The cured, sprayed-in-place PUF shall possess physical characteristics indicated in the following table.

Properties	**ASTM Test**	**Value**	**Units**
Density (sprayed-in-place)	D1622	2.50-3.50	lb/ft^3
K-Factor (aged)	C177 or C518	0.16 (max.) degree F per in	Btu per ft^2/hr;
Compressive strength parallel to foam rise	D1621	40 (min.)	lb/in^2
Shear strength	C273	35 (min.)	lb/in^2
Tensile strength parallel to foam rise	D1623	60 (min.)	lb/in^2
Dimensional stability (humid aging) 28 days, 160 deg. F, 100 percent relative humidity	D2126	15 (max.) Procedure F	Percent net volume change
Water vapor permeability	E 96	3.0 (max.)	Perm/in
Percentage closed/open cells	D2856	90 (min.) 10 (max.)	Percent by volume
Water absorption	D2842	0.10 (max.)	lb/ft^2

B. Shelf Life: PUF material components shall have a minimum shelf life of 6 months. A written statement or other certification shall be submitted showing shelf life expiration date.

C. PUF Primer: Primer used shall be as required and recommended by the manufacturer of the spray foam materials specified except that no cut-back asphalt primers shall be permitted.

© 2017 CDM Smith
All Rights Reserved

D. Elastomeric Protective Coating: The elastomeric roof coating shall be as specified in Section 07540.

2.02 FIRE SAFETY PROPERTIES

A. When tested as a composite system, the sprayed PUF and elastomeric protective coating shall meet the following requirements: roof-covering material shall be rated for exterior fire exposure; UL 790, Class A rating. Composite roof system shall be included in the UL BMD for use as a roof covering material.

PART 3 EXECUTION

3.01 DELIVERY AND STORAGE

A. Materials shall be delivered to the job site in manufacturer's standard commercial containers unopened, undamaged, and bearing the following legible information:

1. Name of manufacturer.

2. Name of contents/product code.

3. Net weight of contents.

4. Lot or batch number.

5. Storage temperature limits.

6. Shelf life expiration date.

7. Mixing instructions/proportions of components.

8. Safety information and instructions.

B. Where materials are specified by an applicable document, labeling shall include the referenced specification numbers, and material designation, such as type and class of the contents. Materials shall be delivered in sufficient quantity to allow work to continue without interruption and shall be stored and protected from damage and weather in accordance with manufacturer's instructions, except as amended herein.

C. Stored material containers shall be supported on pallets and covered with tarpaulin, not polyethylene, with all sides of tarp tied to the bottom of pallets. PUF component containers shall be kept tightly sealed and stored at temperatures between 50 and 80 degrees F and not be exposed to direct sunlight for periods of time sufficient to cause contents to exceed 80 degrees F. Materials which have been exposed to moisture or that exceed shelf life limits shall not be used.

3.02 SPECIAL PRECAUTIONS AND INSTRUCTIONS

A. Safe Working Load Limits: Materials or equipment shall not be placed on the roof deck exceeding the indicated live load limits.

B. Primers: Primers or other materials shall not be diluted unless required and recommended by manufacturer. Cleaning solvents shall not be used for thinning primers or other materials.

© 2017 CDM Smith
All Rights Reserved

C. Material Handling: Materials and containers shall be handled safely and in accordance with recommendations of the manufacturer. Liquids shall be stored in airtight containers and containers kept closed except when removing materials. Equipment or containers containing remains of dissimilar materials or products shall not be used.

D. Shoes: Clean, soft-soled shoes without heels shall be worn while walking on roofing surfaces during installation.

E. Fire and Explosion Hazards: Open flames, sparks, welding and smoking shall be prohibited in the application area.

F. Warning Signs: Warning signs shall be posted a minimum of 150 feet from the application area stating the area is off-limits to unauthorized persons and warning of the presence of flammable materials, irritating fumes, and potential of overspray damage.

G. Protect equipment adjacent to and below the digester tanks from the PUF spray. This includes, but is not limited to, the digester mixing pumps, the access stairwell, the digester building, exposed piping, and all digester gas safety and handling equipment.

3.03 ROOF AREA PREPARATION

A. Pre-Application of the PUF System: Ensure that drains, curbs, cants, expansion joints, roof penetrations, and equipment supports are in place prior to the application of the primer and PUF. Air intake vents shall be sealed off during PUF application. Surfaces shall be examined and all defects corrected that will adversely affect the roofing system application or performance. Masking protection shall be provided as needed to protect surfaces and property which are not to be primed or sprayed with foam.

B. Surface Preparation:

1. Surfaces that are to be primed or receive spray foam application shall be dry; completely cured; free of grease, oils, dirt, or other foreign matter.

2. Iron and steel surfaces which are not primed, shop painted, or otherwise protected shall be sandblasted in accordance with SSPC SP-6. Loose rust and unsound primer shall be removed from shop-primed iron and steel surfaces by scraping or wire brushing.

3.04 WORK SEQUENCE

A. Schedule work to prevent the use of newly constructed roofing for storage, walking surface, material, or equipment movement. If access is necessary, new roofing surfaces, flashings, and mechanical equipment shall be protected.

3.05 APPLICATION AND EQUIPMENT

A. General: The application of PUF and equipment requirements shall be in accordance with printed recommendations of the manufacturer of the PUF system material or as specified herein. In case of conflict, the manufacturer's instructions shall prevail.

B. PUF Application:

© 2017 CDM Smith
All Rights Reserved

1. Do not apply primer during inclement weather or when wind speed over an unprotected roof work area exceeds 15 mph. Primer manufacturer's application requirements shall be followed except that no primer shall be applied when ambient temperature is below 40 degrees F or is expected to fall below 35 degrees F during drying-curing period.

2. PUF shall not be sprayed on roof surfaces when wind speed in the work area exceeds 12 mph unless windscreen protection is used. When wind speed exceeds 25 mph, spraying shall be suspended. PUF shall not be sprayed if the roof surface temperature is less than 50 degrees F, higher than 120 degrees F, or is less than 5 degrees F above the dew point. Determine the dew point at the job site prior to and upon completion of each day's work unless variable weather conditions require more frequent monitoring.

3. Foam shall be applied to provide a minimum finished thickness of 2 inches in at least two spray passes. Each spray pass shall be applied at right angles to the previous pass to the extent practicable. Each pass, except for filleting or tapering as required at terminations, shall be between 0.5 and 1 inch in thickness.

4. Unless otherwise specified, work shall conform with manufacturer's standard details, for foam thickness around penetrations, curbs, and other terminations. Transitions between horizontal and vertical surfaces shall be smooth and sprayed at a nominal angle of 45 degrees.

5. Foam thickness shall not exceed the minimum thickness of the foam by more than 0.25 inch. Apply foam of a sufficient overall surface uniformity to prevent water ponding in excess of 0.25-inch depth. Such individual pools shall not exceed 10 square feet in area nor affect major roof drainage.

6. The finished surface of applied foam shall be "orange peel" or smoother in conformance with sample submitted under Paragraph 1.03 and shall be free of pinholes.

7. If the sprayed foam skin is removed to correct surface texture or to remove excess foam thickness, the cut surface shall be re-sprayed to provide a protective foam skin prior to application of specified elastomeric protective coating. Spray-applied foam that is not bonded, of poor cell structure, wet, or otherwise does not meet the material quality specifications specified herein shall be removed.

8. Spray foam application shall not be started on an area larger than can be brought to the full foam thickness specified on the same day. Foam shall not be applied if it cannot be coated with a roof coating on the same day. No applied PUF, except for leading edges, shall stand uncoated overnight. Cure the applied PUF for a minimum of 2 hours prior to application of the elastomeric protective coating. Use protective shields or barriers when spraying foam along open roof edges to prevent uncontrolled overspray.

C. Foam Spray Equipment:

1. Use an airless foam spray gun of the mechanical, self-cleaning type, that does not require a flushing solvent during the spray operation. The foam metering equipment shall be fully calibrated to monitor each liquid component to within 2 percent of the foam material manufacturer's required metering ratio. Foam metering equipment shall be capable of developing and maintaining the foam manufacturer's required liquid component pressures and temperatures. Foam metering equipment shall have gauges for visual monitoring.

© 2017 CDM Smith
All Rights Reserved

2. The surfaces of component supply containers or tanks used to feed the foam metering/ proportioning equipment shall be protected from moisture by blanketing with dry nitrogen. Compressed air, in contact with foam components during mixing or atomization, shall be supplied through moisture traps that are continuously bled.

3. Do not deposit, on the roof surfaces to be sprayed, materials used for cleaning of equipment or materials dispensed for calibration purposes and establishment of spray gun pattern. Such materials shall be disposed of in compliance with safety requirements and job site regulations.

D. Cleanup: Debris, scraps, waste materials, rubbish and trash shall be removed from the immediate work area and disposed of in a designated location at the end of each workday. Overspray masking materials and coverings shall be removed upon completion of the spray foam application and prior to the application of elastomeric protective coating. The masking over the air intake vents shall not be removed until two hours after the application of the roofing system.

3.06 SPECIAL SAFETY PROVISIONS

A. During application, the following shall be required unless in conflict with a manufacturer's recommendations or other requirements of a recognized legal authority, in which case, those requirements take precedence:

1. Canister-type or fresh air supply masks shall be worn when applying the foam or when handling hazardous liquid materials. Respiratory protective devices shall be as recommended by OSHA 29 CFR and approved by the Mining Enforcement and Safety Administration or be acceptable to the U.S. Department of Labor for the specific contaminant to which a person is exposed. Personnel required to use respiratory protective devices shall be instructed in their use. Such equipment shall be maintained and inspected regularly.

2. Eye and face protection shall be used during PUF application. Face protective equipment shall meet the requirements of ANSI Z87.1.

3. Wear protective clothing and gloves during PUF application. Protect skin areas not covered by clothing by suitable protective creams.

4. When opening the "B" (polyol) foam component material drum, begin by partially unscrewing the bung cap to gradually vent the drum. Pressure develops when "B" component drums are at temperatures above 72 degrees F.

5. When opening the "A" (isocyanate) foam component material drum, do not inhale vapors. Decontaminate the empty nonreturnable "A" component drums by filling with water and allowing to stand for 48 hours with bung cap removed. Under no circumstances shall the drums be sealed or closed.

END OF SECTION

© 2017 CDM Smith
All Rights Reserved

THIS PAGE INTENTIONALLY LEFT BLANK

© 2017 CDM Smith
All Rights Reserved

SECTION 09960
PLASTIC SHEET LINER

PART 1 GENERAL

1.01 SCOPE OF WORK

A. Furnish all labor, materials, equipment and incidentals required and design and install PVC sheet liner for use to effectively protect exposed concrete from corrosion as shown on the Drawings and as specified herein.

B. The work shall include surface preparation and application of sheet liner at all exposed interior surfaces inside precast concrete manholes and structures where PVC lining is called out on the Drawings. The liner shall be cast into the manhole or structure by the precast manufacturer. Field welding of manhole and structure section liner joints shall be performed by the Contractor.

1.02 RELATED WORK

A. Precast concrete manholes and structures are included in Section 02605.

1.03 SUBMITTALS

A. Submit to the Engineer, in accordance with Section 01300, copies of all materials required to establish compliance with this Section. Submittals shall include at least the following.

1. Catalog data, descriptive literature and assembly drawings, and instructions for installation. Data shall include dimensions and materials of construction by product specification reference and grade.

2. Site-specific shop drawings showing a complete layout, limits of work, and details of materials of construction and installation. Submittal shall cover all areas of special construction including, but not necessarily limited to, corners, pipe penetrations, concrete benching, termination strips, construction joints, and any other miscellaneous works. Drawings shall show limits and locations of special construction areas.

3. Qualifications of precast manufacturer's personnel performing factory liner installation to demonstrate their relevant training and experience in similar projects.

4. Qualifications of Contractor's personnel performing field jointing to demonstrate their relevant training and experience in similar projects.

5. Samples including, but not necessarily limited to, the following.
   a. Two 12-inch by 12-inch pieces of liner sheet including locking extensions.
   b. Two outside and inside corner strips.
   c. Two tie rod patching strips.
   d. Two joint strips.
   e. All weld strips.
   f. Two termination strips.
   g. Two angle strips.

© 2017 CDM Smith
All Rights Reserved

6. Field test reports in accordance with Paragraph 3.03D.

1.04 REFERENCE STANDARDS

A. ASTM International (ASTM):

1. ASTM D 149 – Standard Test Method for Dielectric Breakdown Voltage and Dielectric Strength of Solid Electrical Insulating Materials at Commercial Power Frequencies.

2. ASTM D 257 – Standard Test Methods for C Resistance or Conductance of Insulating Materials.

3. ASTM D 412 – Standard Test Methods for Vulcanized Rubber and Thermoplastic Elastomers – Tension.

4. ASTM D 570 – Standard Test Method for Water Absorption of Plastics.

5. ASTM D 696 – Standard Test Method for Coefficient of Linear Thermal Expansion of Plastics Between -30°C and 30°C with a Vitreous Silica Dilatometer.

6. ASTM D 746 – Standard Test Method for Brittleness Temperature of Plastics and Elastomers by Impact.

7. ASTM D 792 – Standard Test Methods for Density and Specific Gravity (Relative Density) of Plastics by Displacement.

8. ASTM D 1004 – Standard Test Method for Tear Resistance (Graves Tear) of Plastic Film and Sheeting.

9. ASTM D 1044 – Standard Test Method for Resistance of Transparent Plastics to Surface Abrasion.

10. ASTM D 1434 – Standard Test Method for Determining Gas Permeability Characteristics of Plastic Film and Sheeting.

11. ASTM D 1894 – Standard Test Method for Static and Kinetic Coefficients of Friction of Plastic Film and Sheeting.

12. ASTM D 2240 – Standard Test Method for Rubber Property – Durometer Hardness.

13. ASTM E 96 – Standard Test Methods for Water Vapor Transmission of Materials.

B. Where reference is made to one of the above or other referenced standards, the revisions in effect at the time of bid opening shall apply.

1.05 QUALITY ASSURANCE

A. Installation of specified liner shall be considered as highly specialized work. Personnel performing this type of work shall be trained by the liner manufacturer in methods of this type of installation.

B. For installers at the precast manufacturer's facility, submit qualifications demonstrating their relevant training and experience in similar projects.

C. For Contractor's personnel performing field jointing of the lining, submit qualifications demonstrating their relevant training and experience in similar projects. Contractor's personnel shall also demonstrate their ability to satisfaction of Engineer.

1. Each welder shall prequalify by successfully passing a welding test before doing any welding. Requalification may be required at any time deemed necessary by Owner. Test welds shall be made in presence of Owner's Representative and shall consist of the following.
   a. Two pieces of liner, at least 15 inches long and 9 inches wide, shall be lapped 1-1/2 inches and held in a vertical position. A welding strip shall be positioned over edge of lap and welded to both pieces of liner plate.
   b. Each end of welding strip shall extend at least 2 inches beyond liner plate to provide tabs.

2. Weld specimen shall be tested by Owner's Representative as follows.
   a. Each welding strip tab, tested separately, shall be subjected to a 10-pound pull normal to liner face with liner being held firmly in place. There shall be no separation between welding strip and liner when welding tabs are submitted to test pulls. Probe weld edges with a putty knife to check for separation at edge.
   b. Test specimens shall be cut from welded samples and tested in tension across welds. If none of these specimens fail when tested, weld will be considered as satisfactory in tension.
   c. If one of specimens fails to pass tension test, a retest shall be permitted. Retest shall consist of testing 3 additional specimens cut from original welded sample. If all 3 of retest specimens pass the test, weld will be considered satisfactory.

1.06 DELIVERY, STORAGE AND HANDLING

A. Contractor shall follow liner and precast manufacturer's instructions completely on receipt, handling, and storage of liner material and lined manhole and structure sections. Take required precautions to prevent scratching, denting, or puncturing liner surface or damaging the anchorage system. Special precautions shall be made for handling during cold weather.

B. Contractor shall exercise care in handling, transporting and placing lined sections to prevent damage to the lining. No interior hooks or slings shall be used in lifting the sections. All handling operations shall be done with an exterior sling or with a suitable fork lift. No manhole or structure section with damaged lining will be accepted until the damage has been repaired to the Engineer's satisfaction.

C. The Contractor shall take all necessary measures to prevent damage to installed lining from equipment and materials used in or taken through the work. Any damage to liner shall be repaired in accordance with liner manufacturer's instructions or replaced with new sheets at no additional cost to Owner.

D. Liner sheets shall be stored in a flat position.

© 2017 CDM Smith
All Rights Reserved

PART 2 PRODUCTS

2.01 GENERAL

A. Plastic liner shall be "Amer-Plate T-Lock" as manufactured by Protective Lining Products, a Division of NOV Ameron International, or approved equal.

B. Liner shall be continuous and free of pinholes both across joints and in liner itself.

C. Lining shall be repairable at any time during life of the manhole or structure.

2.02 MATERIALS

A. Plastic lining shall be of flexible, ribbed polyvinyl chloride sheet with continuous locking extensions embedded in reinforced concrete. Plastic liner sheets, including locking extensions, joint, corner, and welding strips shall be free of cracks, cleavages, or defects adversely affecting protective characteristics of the material.

B. Material used in liner, welding strips, and accessory items shall be a combination of polyvinyl chloride resin, pigments, and plasticizers, specially compounded to remain flexible. Polyvinyl chloride resin shall constitute not less than 99 percent by weight, of resin used in formulation. Copolymer resins will not be permitted.

C. Sheet shall be a minimum of 0.065 inch in thickness with internally molded rib on one side of the sheet. Locking extensions shall be of same material as that of lining and shall be integrally extruded with the sheet. Locking extensions shall be 2-1/2 inch apart and at least 0.375-inch high. Sheets shall have a nominal width of 48 inches.

D. Lining sheet shall be capable of withstanding a test pull of at least 100 pounds per linear inch, applied perpendicularly to concrete surface for a period of one minute, without rupture of locking extensions or withdrawal from embedment. This test shall be made at a temperature of 70 to 80 degrees F inclusive.

E. Lining shall have good impact resistance and shall have an elongation sufficient to bridge up to 1/4 inch setting cracks, which may occur in joint after installation, without damage to lining.

F. Plastic liner plate sheets, welding strips, and accessory items shall meet the following physical properties when tested at 77 +/- 5 degrees F:

1. Tensile Strength:
   a. Initial: 2200 psi min.
   b. Post pre-qualification test: 2100 psi min.

2. Elongation at Break: 200 percent minimum.

3. Tear Resistance: 220 g/mil.

4. Shore Durometer, Type D:
   a. Initial: 1-sec 50 - 60; 10-sec 35 - 50.
   b. Post pre-qualification test: +/- 5.

© 2017 CDM Smith
All Rights Reserved

5. Weight Change: +/- 1.5 percent

G. Adhesive, primer, tape, and other accessory materials shall be as recommended and approved by lining manufacturer.

2.03 SHOP HOLIDAY TESTING

A. Shop holiday testing shall be performed prior to preparing lining sheets for shipment. Sheets shall be tested for pinholes using an electrical spark tester set at 20,000 volts minimum. Any holes shall be repaired and retested.

PART 3 EXECUTION

3.01 GENERAL

A. Preparation of concrete forms and liner shall comply with liner manufacturer's written instruction and recommendations.

B. Work for and in connection with installation of plastic sheet liner, surface preparation, and sealing and welding of joints shall be performed by liner manufacturer or by a firm who is authorized and recommended to Owner in writing by manufacturer.

C. Surface of liner shall be cleaned to permit visual inspection and spark testing.

D. All interior surfaces of the precast concrete manhole sections shall be lined.

E. Hot joint compounds, such as coal tar, shall not be poured or applied to lining.

3.02 FACTORY LINER INSTALLATION

A. Install lining in strict conformity with lining manufacturer's written instructions and manuals.

B. The lining shall be installed with the locking extensions running parallel with the longitudinal axis of the manhole section.

C. The lining shall be held snugly in place against inner forms.

D. Locking extensions shall terminate not more than 1 ½ inches from the end of the inside surface of the pipe section. Joint flaps when used shall extend approximately 4 inches beyond the end of the inside surface.

E. Unless otherwise shown on the Drawings, lining shall be returned at least 3 inches at surfaces of contact between concrete structure and items not of concrete. Method of sealing shall be in accordance with lining manufacturer's recommendations of respective cases.

F. The lining shall be set flush with the inner edge of the bell or spigot end of a manhole section and shall extend to the opposite end or to approximately 4 inches beyond the opposite end depending upon the type of lining joint to be made with the adjoining concrete section.

© 2017 CDM Smith
All Rights Reserved

G. Concrete placed against lining shall be vibrated, spaded or compacted in a way so as to protect the lining and produce a dense, homogenous concrete, securely anchoring the locking extensions into the concrete.

H. In removing forms, care shall be taken to protect the lining from damage. Sharp instruments shall not be used to pry forms from lined surfaces. When forms are removed, any nails that remain in the lining shall be pulled, without tearing the lining, and the resulting holes clearly marked.

I. All nail and tie holes and all cut, torn and seriously abraded areas in the lining shall be patched. Patches shall be made entirely with welding strip and shall be fused to the liner over the entire patch area. The use of parallel, overlapping, or adjoining welding strips will not be permitted. Larger patches may consist of smooth liner sheet applied over the damaged area with adhesive. All edges must be covered with welding strip fused to the patch and the sound lining adjoining the damaged area.

J. Lined concrete manhole sections shall be cured by standard curing methods.

3.03 FIELD INSTALLATION AND JOINTING OF MANHOLE AND STRUCTURE SECTIONS

A. Contractor shall exercise care in handling, transporting and placing lined manhole or structure sections to prevent damage to the lining. No interior hooks or slings shall be used in lifting the sections. All handling operations shall be done with an exterior sling or with a suitable fork lift.

B. No manhole or structure section with damaged lining will be accepted until the damage has been repaired to the Engineer's satisfaction.

C. Field Jointing

1. All field welding of manhole and structure section liner joints shall be in strict conformance with the liner manufacturer's instructions.

2. The joint between lined manhole and structure sections shall be prepared in the following manner.
   a. Section joints shall be made in accordance with Section 02605 and the precast manufacturer's instructions.
   b. All mortar and other foreign material shall be removed from lining surfaces adjacent to the joint, leaving the surface clean and dry.
   c. Section joints shall be dry before field jointing is performed.

3. Field joints in the lining at section joints may be either of the following described types.
   a. The joint shall be made with a separate 4-inch joint strip and two welding strips. The 4-inch joint strip shall be centered over the joint, heat-sealed to the lining, then welded along each edge to adjacent liner sheets with a 1-inch weld strip. The 4-inch joint strip shall lap over each sheet a minimum of ½ inch.
   b. The joint shall be made with a joint flap with locking extensions removed so that a maximum of 1/32 inch of the base of the locking extension is left on the sheet, and extending approximately 4 inches beyond the section end. The joint flap shall overlap the lining in the adjacent section a minimum of ½ inch and be heat-sealed in place prior to welding. The field joint shall be completed by welding the flap to the lining of the adjacent section using 1-inch weld strip.

© 2017 CDM Smith
All Rights Reserved

4. Care shall be taken to protect the flap from damage. Excessive tension and distortion in bending back the flap to expose the joint during laying and joint mortaring shall be avoided. At temperatures below 50 degrees F, heating of the liner may be required to avoid damage.

5. Welding shall fuse both sheets and weld strip together to provide a continuous joint equal in corrosion resistance and impermeability to the liner plate.

6. Hot-air welding tools shall provide effluent air to the sheets to be joined at a temperature between 500 and 600 degrees F. Welding tools shall be held approximately ½ inch from and moved back and forth over the junction of the two materials to be joined. The welding tool shall be moved slowly enough as the weld progresses to cause a small bead of molten material to be visible along both edges and in front of the weld strip.

D. At end of each workday, remove rubbish, empty cans, rags, and other discarded materials from Project site.

3.04 FIELD TESTING

A. After field jointing is completed, test surfaces covered with lining, including welds, with an acceptable electrical spark tester set at 20,000 volts minimum. Perform inspection within 2 days after joints have been completed in order to prevent tearing projecting weld strip and consequent damage to liner from subsequent Work.

B. Physically test welds by a nondestructive probing method, including at least 25 percent of transverse welding strips which extend to a lower edge of liner. Extend welding strips 2 inches below liner to provide a tab. Apply a 10-pound pull to each tab with force applied to face of structure by means of a spring balance. Hold liner adjoining welding strip against concrete during force application. Maintain 10-pound pull if a weld failure develops, until no further separation occurs. Retest defective welds after repairs have been made. Neatly trim tabs after welding strip passes inspection.

C. Submit a field test report for each lined manhole or structure. Contents of the report shall include, but are not limited to, a map of test points that includes the locations of any defective welds that were found, and the results of re-testing after the defective welds were repaired.

END OF SECTION

© 2017 CDM Smith
All Rights Reserved

THIS PAGE INTENTIONALLY LEFT BLANK

© 2017 CDM Smith
All Rights Reserved

SECTION 11265
OPEN-CHANNEL LOW-PRESSURE/HIGH-INTENSITY ULTRAVIOLET TREATMENT EQUIPMENT

PART 1 GENERAL

1.01 SCOPE OF WORK

A. Furnish, install, test, and put into operation an open-channel, gravity flow, low-pressure, high-output, self-cleaning ultraviolet (UV) light system for disinfection of wastewater, complete, in place as shown on the Drawings and as specified herein.

B. The City of Franklin (Owner) has pre-selected the UV equipment for the Franklin WRF Modifications and Expansion Project (Project), a part of which involves the installation of a new ultraviolet light (UV) disinfection system. As such, CDM Smith will act as the Engineer. The General Contractor will be responsible for the purchase of the UV disinfection equipment for the Project from Trojan Technologies (UV Manufacturer), based on the requirements set forth herein.

C. The unit(s) shall be furnished and installed with all necessary accessory equipment including, but not limited to, the UV lamp modules, dry-type transformers (480-480/277V, 3-phase, 4-wire), power distribution centers (PDCs), system control center (SCC), hydraulic system centers (HSCs), automatic cleaning system, motorized influent isolation sluice gates, automatic motorized effluent weir gates, and other auxiliaries, whether specifically mentioned in this Section or not, as required for an installation incorporating the highest standards for the type of service including field testing and instructing the regular operating personnel in the care, operation, and maintenance of all equipment. All equipment and ancillary items provided as part of this equipment specification shall be new, field tested and proven effective for the intended service, and shall meet the requirements specified in the following sections.

D. The UV Manufacturer’s proposal is provided in Appendix B of the Specifications.

E. Furnish, test, and put into operation all interconnecting data and power cables required for a complete operating system. This includes termination of both ends of all cables within the UV system. The UV Manufacturer shall furnish all raceways integral to the UV system (PDCs and/or control panels to UV modules). Installation of raceways shall be by the General Contractor. The General Contractor shall install (pull) the UV Manufacturer supplied cables.

F. The UV Manufacturer shall provide all termination connections, power and data cabling, and raceways from the PDCs to all UV system devices. The incoming power supply, conduit, and all field terminations and interconnections for power and data cables (including termination of lamp to ballast cables within the ballast enclosures) will be the responsibility of the General Contractor.

G. The UV Manufacturer will be required to provide complete wiring diagrams; including recommended conduit sizing and routing (to be confirmed by the General Contractor) on Owner/Engineer supplied basin backgrounds within 1 month of issuance of the Notice to Proceed. Any cost changes in the contract cost resulting from the equipment manufacturer's provision of insufficient information in the wiring diagrams, or the inability to provide these diagrams, will be borne by the UV Manufacturer.

© 2017 CDM Smith
All Rights Reserved

H. Furnish, test, and put into operation all instrumentation and controls equipment necessary including, but not limited to, programmable controllers, operator interface devices, appropriate networking devices, indicators, control stations, controllers, alarm enunciators, push buttons, lights, selector switches, power, and control as required for a complete operational system. Panels shall be constructed in accordance with requirements identified herein. The UV Manufacturer shall coordinate with the General Contractor for proper interface of the UV system controls with the plant control system. UV Manufacturer shall be responsible for providing all hardware, software and firmware including development of drivers if required for interface with the plant control system. The UV Manufacturer shall be present for and conduct testing as described herein. The UV Manufacturer shall provide onsite supervision of the General Contractor and his subcontractors as described herein.

I. For purposes of standardization, and to achieve a common operator interface for control systems within the facility, the major items of instrumentation and process control equipment provided for the UV disinfection system local control panels shall be compatible with the plant instrumentation and control system specified in Division 13.

1. This equipment shall include but not be limited to programmable logic controllers and operator interface devices.

2. The Project includes instrumentation and controls improvements. The existing control architecture will be replaced as described in the Division 13 Specifications and on the Drawings. Refer to Paragraph 2.09 for instrumentation and controls requirements.

3. The UV Manufacturer shall coordinate with the Project instrumentation and control system supplier to ensure compatibility of control circuits and proper interface of the UV system controls with the plant control system.

J. The UV Manufacturer shall be responsible for verifying the compatibility of all system equipment, control devices and software, and other system components to achieve a fully operational UV disinfection system.

K. The UV disinfection system shall be capable of disinfecting secondary wastewater treatment plant effluent to meet the water quality standards listed in this Section.

1.02 RELATED WORK

A. Maintenance of plant operations (MOPO) is included in Section 01014.

B. Delivery, storage and handling are included in Section 01600.

C. Operating and maintenance data is included in Section 01730.

D. Concrete work is included in Division 03.

E. Miscellaneous metals are included in Division 05.

F. Instrumentation work, except as specified herein, is included in Division 13.

G. Pre-Engineered Weather Canopy is included in Section 13120.

© 2017 CDM Smith
All Rights Reserved

H. Electrical work, except as specified herein, is included in Division 16.

1.03 SUBMITTALS

A. Submit, in accordance with Section 01300, complete shop and installation drawings of all materials and equipment furnished under this Section. Submittals shall include the following:

1. A complete bill of materials listing all items to be supplied.

2. Detailed drawings showing all details of construction of the UV system and ancillary equipment, and installation details of all equipment including anchor bolt sizes and locations.

3. All interconnections and interface requirements, dimensions, and locations of all major elements of the UV system including critical clearance requirements.

4. Catalog information and cuts for all manufactured items, including control system components, highlighted to show actual items proposed to be provided.

5. Supporting calculations for the structural design of the equipment sizing, equipment anchorage, eyeshield anchorage, and associated supports. All non-standard structural support needs of the equipment shall be designed and stamped by a Professional Engineer licensed in the State of Tennessee.

6. Detailed schematic and layout drawings and a description of operation of all control panels.

7. Panel construction and panel layout drawings. Panel construction drawings shall show the location of all panel-mounted devices, doors, louvers, and other features. Drawings shall be to scale and include a panel legend identifying all devices, manufacturers, type numbers, tag numbers, and all nameplate inscriptions. Interconnection diagrams shall show all point to point wiring diagrams between all equipment, panel, terminal, junction boxes, and all field-mounted components. The panel submittals shall include heat rise calculations to determine the size of an enclosure cooling system.

8. Theoretical harmonic analysis study for the UV disinfection system which verifies compliance with the harmonics and line notching requirements per IEEE Standard 519, performed in accordance with Paragraph 2.08 of this Section. The study shall also include information on the filter system if required to achieve the specified compliance. The UV Manufacturer shall be responsible for gathering all input data to conduct the study. The report shall be provided prior to or with the UV system shop drawings for approval. UV System submittals received prior to or without the study will be considered incomplete and will not be reviewed. The study shall also contain at least the following:
   a. All input data and assumptions (including backup data).
   b. Explanation of method used to perform the study.
   c. All calculations and/or computer printouts used to arrive at the recommendations.
   d. Proof of coordination with equipment, conductors, etc.

9. Complete manufacturer's specifications, including parts list citing materials (with ASTM UL/CSA, IEC designations, etc.).

© 2017 CDM Smith
All Rights Reserved

10. Hydraulic calculations demonstrating compliance with the specified head loss and hydraulic characteristics.

11. Memory map of PLC registers to the Process Control System Supplier (PCSS).

12. Control narratives and graphics screens.

13. A third-party validated bioassay of the UV system shall be provided along with bid documents. Only bioassays that are conducted by an independent third party will be accepted, without exception. Bioassay validation methodology shall follow protocols described in NWRI Ultraviolet Disinfection Guidelines for Drinking Water and Water Reuse (May 2003) or the IUVA Uniform Protocol for Wastewater UV Validation Applications (July 2011).

B. Design Data

1. Provide basis of design for this project, including background data, calculations, test reports, full-scale operational plant data, and other information showing the development of the proposed design and that it will conform to the requirements of Paragraph 1.06.

C. Certificates

1. Provide an unexecuted copy of the Warranty Bond required in Paragraph 1.08.

2. Provide the testing reports (Startup, Functional Performance, Harmonics, Final Performance) and manufacturer's certification as required in PART 3.

D. Operation and Maintenance Data

1. Complete operation and maintenance manuals shall be submitted in accordance with Section 01730.

E. Provide warranty data in accordance with Section 01740.

F. Testing procedures, requirements, and results as specified in Part 3.

G. Should the submittal include any items not in compliance with this section and/or the Drawings, provide a full description of the non-complying aspects for the Engineer’s review.

1.04 REFERENCE STANDARDS

A. American Society of Civil Engineers (ASCE)

B. American Society for Testing & Materials (ASTM)

C. Institute of Electrical and Electronics Engineers (IEEE)

1. IEEE 519 – Recommended Practices and Requirements for Harmonic Control in Electrical Power Systems

D. International Ultraviolet Association (IUVA)

© 2017 CDM Smith
All Rights Reserved

E. National Electrical Code (NEC)

F. National Electrical Manufacturer’s Association (NEMA)

G. National Institute of Standards and Technology (NIST)

H. Occupational Safety and Health Association (OSHA)

I. Physikalisch-Technische Bundesanstalt (PTB)

J. “Standard Methods for the Examination of Water and Wastewater,” APHA/AWWA/WEF.

K. National Water Research Institute (NWRI)

L. Underwriters Laboratories (UL)

1. UL 508A – Standard for Industrial Control Panels.

M. Where reference is made to one of the above standards, the revision in effect at the time of bid opening shall apply.

1.05 QUALITY ASSURANCE

A. The ultraviolet disinfection system shall be the TrojanUVSIGNA™ system and shall be designed, fabricated, assembled, and tested by Trojan Technologies of London, Ontario, Canada.

B. The UV Manufacturer shall demonstrate experience and expertise in the production and application of disinfection systems for wastewater treatment and the use of amalgam lamp technology and shall provide information establishing successful operation of such systems.

C. UV Manufacturer's Representative

1. The services of a full-time employee of the UV Manufacturer shall be provided on the project site as the UV Manufacturer's representative. The representative shall have complete knowledge of the equipment provided, including its proper installation, operation, and maintenance.

2. The UV Manufacturer's representative shall inspect the installation and supervise any required modifications, additions, or other changes required to allow the UV Manufacturer to certify per Paragraph 3.07 that the complete installation is appropriate and is expected to operate as expected.

3. The UV Manufacturer's representative shall instruct the Owner's and Engineer's personnel on the operation and maintenance of the UV disinfection system. The instruction shall include classroom training on UV technology and the specific installation, and field training on proper operation and maintenance procedures, along with complete demonstrations of same.

4. The UV Manufacturer's representative shall supervise the performance testing of the installation. Performance testing shall be assumed to include, but not be limited to, spiking

© 2017 CDM Smith
All Rights Reserved

of the UV influent with mixed liquor and delivering an adjusted UV dose to simulate the worst-case design influent conditions as closely as possible in accordance with Paragraph 3.04H.1.b.

5. The UV Manufacturer's representative shall provide minimum services in accordance with the following table.

Purpose	No. of Days
Installation Supervision	2
Startup and Functional Testing	7
Intensive Performance Testing	5
Operator Training	2
Follow-Up Visit	1

6. The number of days indicated above shall be provided on an 8-hour day onsite basis with the exception of operator training, which shall be provided on site over the two days of training and shall be allocated at the Owner's discretion. The number of days shall be in addition to travel time.

7. The acceptance of O&M training shall be in accordance with the successful completion of the "Equipment Manufacturer's Certificate of Instruction" as provided in Section 01730. This certificate shall be completed by the UV Manufacturer's representative and the Owner at the completion of each vendor training session.
   a. This instruction period shall be scheduled at least 10 days in advance with the Owner and shall take place prior to plant startup and acceptance by the Owner. The final approved copies of operation and maintenance manuals specified in Section 01730 (three paper copies and three CDs) and copies of approved training materials must have been delivered to the Owner prior to scheduling the instruction period with the Owner.

8. Additional days onsite, if requested by the Owner, shall be based on an 8-hour day of onsite services, the rate for which shall be negotiated between the Owner and UV Manufacturer.

9. The follow-up visit shall be at such time as requested by the Owner within the warranty period to answer questions, address specific problems, and review startup.

10. Warranty service scheduling shall be provided, at the Owner's request, and at no additional cost to the Owner, at any time during the warranty period.

1.06 DESCRIPTION OF SYSTEM

A. The equipment specified herein shall be low-pressure high-output ultraviolet light disinfection equipment designed to reduce *E. coli* concentrations of a filtered, secondary treated wastewater with UV influent characteristics as specified in Paragraph 1.06D so that the final effluent shall meet the final effluent discharge conditions as specified in Paragraph 1.06F. The UV system shall be rated to disinfect and hydraulically pass the peak hour flow.

B. The lamps shall be spaced with centerline spacing that will ensure effective disinfection while maintaining practical system headloss. The system shall be designed to maintain the minimum required submergence of the UV lamps.

C. Treatment processes upstream of the UV system include influent fine screening, grit removal, anoxic zone, oxidation basin, final clarification, and denitrification filtration. Alum or iron salts may be added at two points: upstream of the final clarifiers, and upstream of the filters.

D. Influent Characteristics to Disinfection System

1. The UV disinfection system shall be designed to disinfect at the influent flow rates and with the characteristics shown below:

a. Flow Rates (mgd)	
Peak Hour Flow	33.0
Design Annual Average Day	16.0
Minimum	2.0
b. UV Transmittance at 253.7 nm (minimum)	65 percent
c. Water Temperature (degrees F)	
Maximum, approx.	80
Minimum, approx.	40
d. Air Temperature (degrees F)	
Maximum, approx.	110
Minimum, approx.	-25

E. UV Channel Configuration

1. The UV system shall have two channels.

2. The UV system shall be designed to provide at least one redundant bank/row per channel or one redundant channel at the peak hour flow listed in Paragraph 1.06D.1.a.

3. The UV system shall be designed to deliver the minimum design dose at the maximum design flow (peak hour flow) in Paragraph 1.06A with standby units off.

F. Discharge Permit Limits

1. Discharge Permit Limits

a. TSS (mg/L)	
Summer (May 1 – October 31)	
Weekly Average	15
Daily Maximum	20
Winter (November 1 – April 30)	
Weekly Average	40
Daily Maximum	45
b. pH, Daily Maximum (Standard Units)	6.0 to 9.0
c. 5-day CBOD (mg/L)	
Summer (May 1 – October 31)	
Monthly Average	4.0
Weekly Average	6.0
Daily Maximum	8.0
Winter (November 1 – April 30)	

© 2017 CDM Smith
All Rights Reserved

	Monthly Average	10
	Weekly Average	15
	Daily Maximum	20
d.	*E. coli* bacteria (colony forming units (CFU)/100 mL)	
	Monthly Average	126
	Daily Maximum	941

G. Guaranteed System Performance

1. The end of lamp life (EOLL) UV dose, validated by independent third-party bioassay as outlined by NWRI or IUVA, at peak hour flow in an effluent with 65 percent UV transmission at 253.7 nm shall not be less than Paragraph 1.06G.1.a, Paragraph 1.06G.1.b, or Paragraph 1.06G.1.c below. Bioassays other than MS2, T1, or *B. subtilis* will not be acceptable.
   a. 24 mJ/cm^2 validated using MS2 bacteriophage
   b. 15 mJ/cm^2 validated using T1 bacteriophage
   c. 24 mJ/ cm^2 validated using *B. subtilis*

2. The system design shall be based on independent third-party bioassay test results, with the following criteria. The basis for evaluating the UV dose delivered by the UV system shall be by an independent third-party bioassay, without exception. Bioassay validation methodology shall follow protocols described in NWRI Ultraviolet Disinfection Guidelines for Drinking Water and Water Reuse (May 2003) or IUVA Uniform Protocol for Wastewater UV Validation Applications (July 2011). The dose shall be evaluated on the basis of MS2 bacteriophage, T1 bacteriophage, or *B. subtilis* only; other surrogate organisms will not be considered.
   a. UV transmission (T10) = 65 percent (at 253.7 nm)
   b. UV lamp end-of-lamp-life factor (fP) = 80 percent. A higher EOLL factor may be used if third-party validation can be provided; however, the factor shall not be greater than 90 percent.
   c. Quartz jacket fouling factor (fT) = 0.88 (based on clean sleeves). A higher fT factor may be used if third-party validation can be provided; however, the factor shall not be greater than 95 percent.

3. The power consumption and power factor per lamp (including ballast losses), provided by the UV Manufacturer, are 1,053 Watts and 0.99, respectively. The total system peak power consumption (*i.e.,* meeting the discharge permit requirements in Paragraph 1.06F at the peak hour flow rate listed in Paragraph 1.06D.1.a with no redundant banks operating) shall not exceed the Guaranteed Power Consumption and power factor specified by the UV Manufacturer. The total system peak power consumption shall be the product of the measured power consumption per lamp (including ballast losses) and the total number of the installed lamps, divided by the power factor. The total system peak power consumption for the UV system specified herein is 117.3 kW.

4. The actual retention time of the effluent within the system determined by hydraulic analysis shall be no less than 0.9 times the theoretical retention time as documented in the bioassay report.

5. The UV system manufacturer shall provide an automatic level control (ALC) system to maintain the water level within the UV channels to provide proper submergence needed for operation of the system. However, the upstream water level, indicated on the attached

© 2017 CDM Smith
All Rights Reserved

drawings as Point 1, shall not exceed the elevation in the table below. The water level downstream of the ALC will vary with plant flow rate. The table below shows the calculated downstream water levels assuming that the UV effluent weir crest elevation is 634.50 ft. The location of this downstream water level is indicated as Point 2 on the attached drawings. The total headloss for each channel shall not exceed the boundary conditions listed below; this headloss shall be confirmed by measurements in the field after startup. Confirmation of the total headloss shall be a condition of acceptance.

Flow Condition	Flow Rate (mgd)	WSE in UV System Influent Box	WSE Downstream of UV Control Weirs
Minimum Hour	2	Not to Exceed 635.7 ft	632.4 ft
Design Annual Average Day	16	Not to Exceed 635.6 ft	633.5 ft
Peak Hour	33	Not to Exceed 635.05 ft	634.5 ft

1.07 MAINTENANCE

A. Spare parts shall be provided with the UV disinfection system. The parts shall not be used or consumed by the UV Manufacturer or Contractor and shall be transferred in new condition, free of defects, to the Owner upon Substantial Completion. The parts shall be provided in sturdy containers, labeled on all sides with information concerning the contents, and suitable for long-term storage in a room without environmental controls.

B. The following spare parts shall be provided:

1. 10 percent spare parts (except ballasts) including lamps; sleeves; mechanical wiper rings; all associated electrical connectors; and all seals, connectors, mounting parts and other items which should be replaced upon lamp or sleeve replacement shall be provided unless the number of modules is less than 10. If the number of modules is less than 10, then the number of spare parts (except ballasts) provided shall be equal to the number of parts in one module.

2. 10 percent spare ballasts, including all electrical connectors and mounting parts which should be replaced whenever a ballast is replaced, shall be provided unless the number of modules is less than 10. If the number of modules is less than 10, then the number of spare ballasts provided shall be equal to half the number of lamps per module.

3. One UV intensity sensor.

4. Two pairs of personnel goggles for protection against UV energy between 200- to 400-nanometers wavelength.

5. Two UV area warning signs.

6. One mechanical wiping system exerciser, if required.

© 2017 CDM Smith
All Rights Reserved

7. One set of gaskets, seals, etc., for each size and type of gate gear box.

8. One spare handwheel or hand crank for each size and type of gate operator.

9. Manufacturer's standard stock of spare parts for each size and type of electric motor operator provided.

10. A quantity of any required lubricants and cleaning chemicals, wipers, or brushes suitable for 18 months' operation with quantities determined based on actual operation during startup and prior to Substantial Completion.

11. One spare PLC I/O module of each type used.

12. One spare PLC power supply of each type used.

13. One spare HSC hydraulic pump.

14. Spare parts as required by the Division 13 specifications.

C. Spare parts pricing for ballasts, UV lamps, and wiper seals are the same as those provided by the UV Manufacturer during the proposal process. The prices for each of these items as of June 2013, the date of the accepted UV proposal, are as follows:

1. Ballasts - $880.00 each.

2. UV Lamps - $450.00 each.

3. UV Wipers – $15.00 each.

The escalation of the spare parts prices above shall be tied to the "Electrical Machinery and Equipment" commodity group, which has a commodity code of 11-7 in the Producer Price Index (PPI). This unadjusted commodity index can be found in Table 3 on the Bureau of Labor Statistics website. The web address is http://www.bls.gov/news.release/ppi.t03.htm. The index for "Electrical Machinery and Equipment" in June 2013 was 113.8. The spare parts pricing shall be adjusted annually each June using the formula below:

Spare Part Replacement Cost (Current Year) =

Spare Part Price (June 2013) x PPI (June of Current Year) / PPI (June 2013)

D. All tools, other than those commonly found in a mechanic's tool box, as required for maintenance and repair of the UV system, shall be provided in a metallic tool chest labeled as being the tools for this system.

E. Spare parts, special tools and lubricants shall be packaged, stored and delivered to the Owner in accordance with Section 01600.

© 2017 CDM Smith
All Rights Reserved

1.08 WARRANTY

A. The equipment furnished under this section shall be free of defects in materials and workmanship, including damages that may be incurred during shipping, storage, and installation for a period of 18 months from the date of startup.

B. The UV Manufacturer shall provide to the Owner a warranty bond equal to the UV equipment contract amount as guarantee that the installed system produces a final effluent which meets the bacteriological inactivation requirements and is within the specified power consumption, ballast, and lamp life requirements. The filtered effluent quality entering the UV system shall be equal to or better than that specified above when measuring performance. The bond shall be for a term of 18 months from the date of written acceptance/approval of the UV system by the Engineer and the Owner.

C. The UV lamps shall be warranted for a minimum of 15,000 hours on a prorated basis. The UV Manufacturer shall warrant that the UV lamp output will be no less than the EOLL factor listed in Paragraph 1.06G.2 of a new lamp (after 100 hours of initial lamp burn in).

D. The UV ballasts shall be warranted for 10 years on a prorated basis.

1.09 PROGRESS PAYMENTS

A. Progress payments shall not exceed the following unless agreed to by the Owner:

Milestone		Payment (Cumulative Percent of Total Order Price Less Retainage)
1.	Approval by Engineer of Shop Drawing Submittal	15
2.	Delivery of System to Job Site	80
3.	Acceptance of Functional Testing	90
4.	Acceptance of Start-Up/Performance Testing Report, Certification of System Performance, and Receipt of Warranty Bond	100

PART 2: PRODUCTS

2.01 MATERIALS AND EQUIPMENT

A. General

1. Provide all new materials and equipment free from any defects.

2. Where two or more units of the same type of material or equipment are required, provide products of a single manufacturer.

3. All metal components exposed to or in contact with plant effluent, including all anchoring hardware, shall be Type 316L stainless steel. Threading of stainless steel fasteners shall be done using an approved non-galling application, Loctite or similar product. All materials exposed to UV light shall be unaffected by prolonged exposure to same and shall be Type

316L stainless steel, Type 214 quartz, Teflon or a suitable UV resistant material. All wiring exposed to UV light or sunlight shall be Teflon coated.

4. All metal components not in contact with plant effluent and/or UV light shall be Type 304L or Type 316L stainless steel.

2.02 ULTRAVIOLET LAMPS AND BALLASTS

A. The UV lamps shall be low-pressure, high-output amalgam UV lamps.

B. Each lamp shall produce UV light with at least 90 percent of the UV emission at 253.7 nanometer wavelength.

C. The filament of the lamps shall be of clamped design, sufficiently rugged to withstand shock and vibration.

D. UV lamps shall have a single-end electrical connection.

E. The minimum UV lamp arc length shall be 62 inches.

F. The UV lamp shall be efficient in producing germicidal radiation and shall be rated to produce zero ozone. Each UV lamp shall have an efficiency of at least 39 percent.

G. The lamp bases shall be of a durable construction resistant to UV and ozone.

H. The lamp design shall prevent electrical arcing between electrical connections in moist conditions.

I. The wiring connection to the lamp shall be designed such that the heat from the lamp does not adversely affect the wiring.

J. The ballasts shall be of electronic design and specifically designed for the proposed lamps.

K. Changing of lamps and sleeves shall be easily performed by the operating personnel at the plant. Systems whereby the lamp assemblies have to be returned to the factory for lamp replacement will not be acceptable.

L. Adequate space for the removal and maintenance of ultraviolet lamps must be provided. The equipment shall be easily removable and lamps shall be replaceable without draining the reactor.

M. Lamp life shall be as specified in Paragraph 1.08C.

2.03 ULTRAVIOLET LAMP JACKETS

A. UV lamp sleeves shall be provided around each UV lamp to prevent the UV lamps and electrical connections from coming in contact with the wastewater.

B. The UV lamps are to be protected from contact with the effluent by a 99.9-percent silicon dioxide quartz jacket with a minimum of 90-percent transmission of UV radiation at the 253.7 nanometer wave length.

© 2017 CDM Smith
All Rights Reserved

C. One end of the quartz jacket shall be a closed test tube end and the other open with smooth radius edges.
D. Lamp sleeves shall not degrade due to exposure to the UV light.

2.04 UV MODULES

A. Each UV module shall consist of UV lamps mounted on a Type 316L stainless steel frame. The UV lamps shall be mounted in the module frame.

B. The UV modules shall be installed inside an enclosed Type 316L stainless steel reactor so as to shield UV radiation from overhead observation. Each UV module shall be connected to the power distribution center using a connector to enable easy disconnection to facilitate module removal.

C. Each UV module shall be fabricated of Type 316L stainless steel to meet NEMA 4X or better standards.

D. Each module shall be completely field-serviceable while located in the channel and shall be fitted with water-resistant NEMA 4-rated multi-pin connectors for power and data.

E. All electrical components and connections shall be mounted a minimum of 1 foot above the 100-year flood plain elevation of 630.8 ft to protect against electrical hazard and UV system damage.

F. If the components are located where they could be submerged, electrical components shall have NEMA 6P submergence-rated enclosures.

G. All UV module components, in addition to the UV lamps, such as the photosensor and the jacket cleaning system, shall be controlled and monitored remotely from the System Control Center (SCC) as described in Paragraph 2.10C.

H. Each module shall be equipped with lifting lugs so that the modules or banks of modules can be easily lifted by the Contractor with a standard hoist or similar lifting device during installation. The UV system shall be equipped by the UV Manufacturer with an integral lifting mechanism to raise the module or banks out of the channel for servicing. Control of the lifting mechanisms shall be from the Hydraulic System Centers (HSCs).

I. Automatic interlock protection shall be incorporated into each module such that when the bank is not seated in place, power to the lamps in that bank will automatically shut off, an alarm will be triggered, and automatic wiping operations for that bank will be disabled.

J. Mechanical Wipers

1. Each module shall be equipped with mechanical wipers. The mechanical wipers shall be hydraulically-driven and operable in either manual or automatic mode. The cleaning wipers shall be automatically initiated and controlled from the HSCs. Cleaning cycle intervals shall be field-adjustable.

2. Wipers shall be so designed such that they will provide effective and uniform cleaning performance, long service life, low replacement and maintenance costs, and compensation for wear over the life of the wiper.

© 2017 CDM Smith
All Rights Reserved

3. Wipers shall be fabricated of UV resistant material and installed in a manner that accommodates any irregularities associated with the quartz sleeves and precludes any binding during operation.
4. The wipers shall be replaceable without having to dismantle the wiper drive system, removal of the quartz sleeves, or disassembly of the module structure.

5. The wiper system shall incorporate a centrally located means of supporting and aligning the wipers properly throughout the travel.

6. The wipers shall travel the full length of the UV lamp sleeves.

2.05 UV INTENSITY SENSORS

A. Each bank shall have one UV intensity sensor to measure the UV intensity at 253.7 nm wavelength. The measuring range of the sensor shall be suitable for low-pressure, high-output lamps under the expected wastewater transmittance and lamp fouling conditions.

B. The sensor shall respond to the germicidal portion of UV light generated.

C. The sensor shall not degrade after prolonged exposure to UV light or wastewater.

D. The sensor shall be located at 1 cm or at the approved distance from the sleeve of a UV lamp jacket.

E. The sensor shall be installed in a location suitable for ease of maintenance.

F. The UV intensity measured by each active UV sensor shall be selectively displayed on the local operator interface at the SCC.

G. The SCC shall include a reference sensor check procedure to allow operators to check the output of each UV intensity sensor against a calibrated sensor.

H. The UV intensity monitoring system shall be factory calibrated to NIST standards.

I. The sensor shall be automatically cleaned at the same frequency as the lamp sleeves to prevent fouling of the sensor and spurious false alarms for low intensity.

J. The UV sensors shall have a NIST or PTB calibration certificate.

2.06 STAINLESS STEEL INFLUENT SLUICE GATES & EFFLUENT WEIR GATES

A. The UV Manufacturer shall supply motorized influent isolation sluice gates (Tag Nos. SU-810-1 and SU-810-2) and motorized effluent weir gates (Tag Nos. WG-820-1 and WG-820-2) for each channel. Gates shall all be Type 316L stainless steel, each equipped with motor operators by Limitorque, Rotork, or AUMA, no equals. All gates and operators shall be supplied by the UV Manufacturer, while the General Contractor will be responsible for power supply to the operators, termination of gate wiring to the enclosures, and installation of the gates and operators. The UV Manufacturer shall be responsible for connecting all the controls and wiring to the UV Control Panel. Instrumentation and controls for operation of the influent and effluent

© 2017 CDM Smith
All Rights Reserved

gates shall be fully integrated by the UV Manufacturer into the instrumentation and control system.

B. The dimensions of the influent and effluent gates shall be designed in accordance with the channel geometry and the peak hydraulic flow taking into account the maximum headloss restriction in Paragraph 1.06G.5.

C. The effluent weir gates shall be designed to maintain the in-channel water level within the UV Manufacturer's recommended range, to maintain UV lamp submergence at all rates of flow within the ranges specified in Paragraph 1.06D.

D. The stainless steel gates and accessories shall be fabricated Type 316L stainless steel self-contained type. Guides for the influent sluice gates shall be designed to be embedded in concrete, with the top and bottom seals designed to mount on the face of concrete. Guides for the effluent weir gates shall be designed to mount on the face of concrete.

E. The guides shall be of Type 316L stainless steel construction. The guides shall be designed for maximum rigidity, shall have a weight of not less than 3-lb/ft and shall be provided with holes for anchor bolts every 18-in for face mounted units or embedding keyways for embedded units.

F. An angle shall be welded to the guides across the invert of the opening on face mounted gates and up both sides of all gates. A hollow bulb "J" or "P" seal shall be attached to this angle with stainless steel strips and attaching bolts. The seal shall be arranged so that it will deflect a minimum of 1/16-in. Angle, strips and bolts shall be the same material as the guides.

G. The operating stem(s) shall be solid Type 316L stainless steel with a minimum diameter of 1-1/2-in, designed to withstand at least twice the rated output of the operator. The slenderness ratio (l/r) shall be less than 200. Gates shall have double stems if the width is two or more times the height. Rising stems shall be enclosed in a clear Plexiglas stem cover with field applied position indicating tape.

H. Where the guides extend above the operating floor, they shall be sufficiently strong so that no further reinforcing will be required. Where required, the yoke to support the operating benchstand shall be formed by two angles welded at the top of the guides to provide a one piece rigid frame. The arrangement of the yoke shall be such that the disc and stem can be removed without disconnecting the yoke.

I. The disc or sliding member shall be of Type 316L and the stainless steel plate reinforced with "U" or angle shaped stainless steel members welded to the plate not more than 16-in apart. The disc shall not deflect more than 1/360 of the span of the gate under the design head. Reinforcing ribs shall extend into the guides so that they overlap the seating surface of the guide. A specially molded resilient seal shall be mounted on the bottom of embedded unit discs or on the edge of the disc to provide flush bottom closure. The shape of the seal shall produce a seating surface having a minimum width of 3/4-in and the seal shall extend into the secondary slot of the guide. The vertical face of the seal shall be in contact with the seating surface of the guide to provide a proper seal at the corners. Reinforcements, retainer, and bolts shall be of the same material as the disc. The invert of embedded unit frames shall have an angle welded to the lower ends of the guides to form a seating surface for a resilient seal mounted on the disc. Angle shall be of the same material as the guides.

J. All parts of the gate shall have a minimum thickness of 1/4-in.

© 2017 CDM Smith
All Rights Reserved

K. All necessary attaching bolts and anchor bolts shall be Type 316L stainless steel and shall be furnished by the gate manufacturer.

L. The maximum acceptable leakage of each gate shall be as follows:

1. Unseating condition: Not more than 0.10 gpm per foot of periphery.

2. Seating condition: Not more than 0.05 gpm per foot of periphery.

M. Accepted Manufacturers:

1. Golden Harvest, Inc.

2. Hydro Gate Corp.

3. Rodney Hunt Company.

4. Whipps, Inc.

5. No equals.

2.07 ELECTRIC MOTOR OPERATORS

A. General

1. Electric motor operators shall comply with AWWA C540 as herein modified.

2. Electric motor operators for all influent and effluent gates shall be attached to the operating mechanism housing by means of a flanged motor adapter piece.

3. Gearing: The motor operator shall include the motor, reduction gearing, reversing starter, torque switches, and limit switches in a weather-proof NEMA 4 enclosure assembly. See electrical drawings for electrical environments and classifications. The operator shall be a single or double reduction unit consisting of spur or helical gears and worm-gearing. The spur or helical gears shall be of hardened alloy steel and the worm-gear shall be alloy bronze. All gearing shall be accurately cut with hobbing machines. All power gearing shall be grease- or oil-lubricated in a sealed housing. Ball or roller bearings shall be used throughout. Operator output speed changes shall be mechanically possible by simply removing the motor and changing the exposed or helical gearset ratio without further disassembly of the electric operator.

4. Starting Device: Except for modulating valves, the unit shall be so designed that a hammer blow is imparted to the stem nut when opening a closed valve or closing an open valve. The device should allow free movement at the stem nut before imparting the hammer blow. The operator motor must attain full speed before stem load is encountered.

5. Switches and Wiring: Travel in the opening and closing directions shall be governed by a switch responsive to mechanical torque developed in seating the valve, or by an obstruction met in opening or closing the valve, or by an on-board microprocessor. The torque switch shall be adjustable and shall function without auxiliary relays or devices, or it shall be

© 2017 CDM Smith
All Rights Reserved

adjustable in one-percent increments, sense by a pulse-counter which receives 15 pulses per rotation of the unit. The gear limit switches shall be of the open type and shall be actuated by a rotor cam with 4 contacts to each cam or gear train. The operator shall have a number of gear trains as required to produce the operation indicated. The operator shall be wired in accordance with the schematic diagram. All wiring for external connections shall be connected to marked terminals. One 1-in and one 1-1/4-in conduit connection shall be provided in the enclosing case. A calibration tag shall be mounted near each switch correlating the dial setting to the unit output torque. Position limit switches and associated gearing shall be an integral part of the valve operator. To provide the best possible accuracy and repeatability, limit-switch gearing shall be of the "counting" intermittent type, made of stainless steel, grease-lubricated, and enclosed in its own gearcase to prevent direct and foreign matter from entering the gear train. Switches shall not be subject to breakage or slippage due to over-travel. Traveling-nuts, cams, or microswitch tripping mechanisms shall not be used. Limit-switches shall be of the heavy-duty open contact type with rotary wiping action.

6. Handwheel Operation: A permanently-attached handwheel shall be provided for emergency manual operation. The handwheel shall not rotate during electrical operation. The maximum torque required on the handwheel under the most adverse conditions shall not exceed 60-lb-ft, and the maximum force required on the rim of the handwheel shall not exceed 60-lb. An arrow and either the word "open" or "close" shall be cast or permanently affixed on the handwheel to indicate the appropriate direction to turn the handwheel.

7. Motor: The motor shall be of the totally-enclosed, non-ventilated, high-starting torque, low-starting current type for full voltage starting. It shall be suitable for operation on 480-volt, 3-phase, 60-Hz current, and have Class F insulation and a motor frame with all dimensions in accordance with the latest revised NEMA MG-1 Standards. The observed temperature rise by thermometer shall not exceed 55 degrees C above an ambient temperature of 40 degrees C when operating continuously for 15 minutes under full rated load. With a line voltage ranging between 10 percent above to 10 percent below the rated voltage, the motor shall develop full rated torque continuously for 15 minutes without causing the thermal contact protective devices imbedded in the motor windings to trip or the start overloads to drop-out. Bearings shall be of the ball type and thrust bearings shall be provided where necessary. All bearings shall be provided with suitable seals to confine the lubricant and prevent the entrance of dirt and dust. Motor conduit connections shall be watertight. Motor construction shall incorporate the use of the stator and rotor as independent components from the valve operation such that the failure of either item shall not require operator disassembly or gearing replacement. The motor shall be provided with space heater suitable for operation on 120-volt, single-phase, 60-Hz circuit unless the entire operator is an hermetically-sealed, non-breathing design with a separately sealed terminal compartment which prevents moisture intrusion.

8. OPEN/CLOSE Local Controls: Each electric motor operator shall be provided with a local set of pushbuttons that are integral to the valve operator housing. Local controls shall include provisions for local lockout/tagout. Disconnects shall meet NEC and other applicable code requirements.

© 2017 CDM Smith
All Rights Reserved

B. Electric Motor Operators (AC Reversing Control Type):

1. General: Where indicated, electric motor operators shall be the AC reversing type complete with local control station with open/close and local/off/remote selector switches. Each motor operator shall include an integral disconnect switch at the power input.

2. Operator Appurtenances: The operator for each valve shall be supplied with an open (red) and closed (green) status lights; open, close and lock-out-stop push-buttons, and all other devices indicated.

3. Starter: The starter shall be suitably sized amperage rated reversing starter with its coils rated for operation on 480-volt, 3-phase, 60-Hz current. A control power transformer shall be included to provide a 120-volt source, unless otherwise indicated. The starter shall be equipped with 3 overload relays of the automatic reset type. Its control circuit shall be wired as indicated. The integral weatherproof compartment shall contain a suitable sized 120-volt AC, single-phase, 60-Hz space heater the prevent moisture condensation on electrical components.

4. Control interface: All operators for modulating service shall be capable of transmitting a 4-20 ma signal proportional to operator position and shall be capable of receiving a 4-20 mA signal proportional to commanded position. Interface to 4-20 mA signals shall be with standard interface product of the operator manufacturer, no custom wiring will be permitted.

5. Manufacturers:
   a. Limitorque.
   b. Rotork.
   c. AUMA.
   d. No equals.

6. Provide a minimum of one 8-hour site visit by the operator manufacturer's representative to certify proper installation, test, troubleshoot, program as necessary, and train Owner's staff on proper operation and maintenance of the units.

2.08 ELECTRICAL

A. Available plant power supply is 480 Volt, 3 Phase, 3 Wire, 60 Hz power from the plant distribution system.

B. The UV disinfection system shall be divided into electrical subsystems.

C. Each bank of UV lamps shall be powered from one Power Distribution Center (PDC).

D. The UV Manufacturer shall provide a dry-type (480-480/277V, 3-phase, 4-wire) transformer for each PDC (four transformers total). Each transformer shall have a 480-volt primary and a maximum rating of 45 kVA. Each transformer shall be in a NEMA 3R Type 316 stainless steel enclosure, and be of TENV type construction. The transformers shall have a K-factor rating of K-13, 220°C insulation class with 80°C temperature rise, copper windings, and UL listed. Refer to Division 16 for additional requirements. The transformers shall be located as shown on the Drawings.

© 2017 CDM Smith
All Rights Reserved

E. Maximum peak power consumption per module shall be no greater than 27.4 kilowatts (kW) and shall be no greater than 54.8 kW per channel.

F. Each module shall be completely field-serviceable while located in the channel and shall be fitted with water resistant UL rated multi-pin connectors for power and data. Combined power and data shall not be acceptable.

G. The UV Manufacturer shall furnish all power and data cabling between the UV modules and the PDC. The incoming power supply, conduit, and all field terminations and interconnections for power and data cables will be the responsibility of the Contractor.

H. Interconnect cables and data cables provided in between the UV modules and PDC shall be provided by the UV Manufacturer and installed by the Contractor in cable tray or conduit as recommended by the UV System Manufacturer.

I. Conduit for all power, data, control, and instrumentation wiring and cable shall be provided under Division 16.

J. Cable tray, if required, shall be provided under Division 16.

K. If the components are located where they could be submerged, electrical components shall have NEMA 6P submergence-rated enclosures.

L. Harmonics Study

1. The UV Manufacturer shall provide a theoretical electrical system harmonics study for the electrical distribution system including utility. The goal of the study shall be to determine requirements for the UV disinfection system to comply with harmonic distortion levels. The UV Manufacturer shall be responsible for providing isolation transformers or filters to meet these requirements. The UV Manufacturer shall perform or shall hire an independent contractor to perform a field harmonic study and shall provide additional harmonic filters as required to meet the requirements of IEEE 519 with no increase in the contract price. For preliminary calculation purposes, the short circuit current shall be 20,000 A, and the Point of Analysis (Point of Common Coupling) shall be the power panels supplying the UV system. The calculations shall be performed using the UV system and no other load operating on the system. The harmonics study shall be completed using each power source. The final electrical system design parameters will be sent to the successful contractor as soon as they are available. The final calculations shall incorporate the final system configuration parameters.

2. The harmonics study shall verify compliance with the harmonics and line notching requirements specified herein, with information on the filter system (if necessary) required to achieve the specified levels. The study shall be based on and contain at least the following:
   a. Explanation of method used to perform the study.
   b. Explanation of study results with specific recommendations on filters and/or other measures, which will be implemented to meet the specified limits.
   c. All calculations and/or computer printouts used to arrive at the recommendations.
   d. Individual UV module voltage and current harmonic content up to the fiftieth harmonic, and the combined total of all the UV module harmonic contents reflected in

the system source supply voltage and current as a percentage of the 60 Hertz fundamental under actual load conditions from 0 to 60 Hertz in 10 Hertz increments.

3. The harmonic distortion on the total installed distribution system for voltage and current distortion levels and line notching shall meet the requirements of IEEE 519. Capacitor-inductor filter traps that require tuning to the power system shall not be acceptable. Harmonic mitigation schemes that require the operation of multiple banks shall not be acceptable. The UV Manufacturer shall provide for the design, furnishing, and installation of the filtering and appurtenances required to meet these requirements, and all related costs shall be included in the Contract Price.

4. The UV Manufacturer shall be responsible for obtaining all data necessary to perform the study, including feeder cable sizes, approximate feeder length, motor data, switchgear data, existing field data (if required) and any other information relative to the study.

5. The report shall be provided prior to or with the UV system shop drawings for approval. UV System submittals received prior to or without the study will be considered incomplete and will not be reviewed.

6. The UV Manufacturer shall provide an up-to-date single line diagram with referenced data with the submittal for the study.

7. The point of common coupling for the harmonic analysis shall be the power panels serving the UV equipment.

2.09 INSTRUMENTATION AND CONTROL

A. Compatibility of Owner's programming equipment with the UV Manufacturer's system:

1. Machine Readable Documentation – The UV Manufacturer shall provide two sets of documented as-built electronic PLC, PC, and HMI files on CD-ROMs in native machine-readable format for all programs and configurations developed under this Contract. This machine-readable documentation shall include all documentation files including logic and annotation files using standard programming language developed by the PLC manufacturer. Any changes made during or after factory acceptance test shall be incorporated in final documentation and the O&M manual at no additional cost to the Owner.

2. During Functional Testing, the UV Manufacturer shall ensure that any devices or programming computers that the Owner will use to maintain the system can monitor the control processors on line, make online changes, upload, and download the processors and operator interface panels to ensure proper communication has been set up and that programming software versions are compatible with the equipment provided.

3. During Functional Testing, the UV Manufacturer shall ensure the PLC and HMI addresses (IP addresses, if an Ethernet network) are configured to be compatible with and in accordance to the plant's SCADA system network hierarchy.

B. General Requirements:

1. All control panels and terminal cabinets shall conform to the requirements of Section 16191.

© 2017 CDM Smith
All Rights Reserved

2. Each control panel and terminal cabinet shall bear the UL label. The UL label shall apply to the enclosure, the specific equipment supplied with the enclosure, and the installation and wiring of the equipment within and on the enclosure. If required for UL labeling, provide ground fault protective devices, isolation transformers, fuses and any other equipment necessary to achieve compliance with UL 508A requirement. The Drawings do not detail all UL 508A requirements.

3. Provide one license of the OIT configuration and application development software package complete with documentation and disks. The software package shall include a software license agreement allowing the Owner the right to use the software as required for any current or future modification, documentation, or development of the OITs furnished for this project.

C. Power Distribution Center (PDC):

1. Each floor-mounted PDC shall be a NEMA 4X Type 316L stainless steel enclosure as shown on the Electrical Drawings. The maximum size of the PDC enclosures shall be 80 inches high, 43 inches wide, and 29 inches deep. The PDCs shall be located and oriented as shown on the Drawings. The doors on all PDCs shall swing open to the right.

2. Each PDC shall be designed to operate off of a 480/277 Volt, 3 phase, 4-wire power supply as shown on the Electrical Drawings.

3. Power shall enter the PDC and terminate in load centers that are mounted inside the PDC. Each load center provides power to a bank of modules in each UV disinfection channel.

4. Each module shall be protected by a panel-mounted thermal magnetic circuit breaker device. These circuit breakers shall be mounted in the PDC. Each circuit breaker shall provide visual trip indication, be capable of regular testing. To ensure safe operation, ground fault circuit detection systems, which permit remote reset, shall not be used.

5. The PDC shall provide power to the UV lamp modules via plug-in multi-pin connectors.

6. High temperature in the PDC shall shut down the lamps controlled by that PDC and trigger a “PDC High Temperature Shutdown” alarm.

7. Each PDC shall include a front-mounted, three-way selector switch that allows selection of “Local Off,” “Local On,” or “Remote” operating modes.
   a. Local Off: The bank is off, and the SCC has no control over the bank.
   b. Local On: The bank is on at 100 percent power, and the SCC has no control over the bank.
   c. Remote: One of the following three Remote operating modes shall be selected via the OIT.
      i. Remote Off: The bank turns off and remains off.
      ii. Remote Manual: The bank operates at a power level (30 to 100 percent) set by the operator at the OIT.
      iii. Remote Auto: The bank is controlled by the Auto Pacing routine. The SCC controls the number of banks in operation and the RED target of each bank in order to maintain the delivered UV RED above an entered setpoint.

D. System Control Center (SCC):

© 2017 CDM Smith
All Rights Reserved

1. The SCC, which houses the PLC controller, shall be NEMA 4X Type 316L stainless steel and floor-mounted as shown on the Electrical Drawings. The maximum size of the SCC enclosure shall be 72 inches high, 36 inches wide, and 24 inches deep. The SCC shall be located and oriented as shown on the Drawings. The door of the SCC shall swing open to the left.

2. The SCC shall include an Allen Bradley CompactLogix L33ERM (no equals) PLC controller and a programmable NEMA 4X rated, 15-inch Allen Bradley PanelView Plus 6 Series (no equals) operator interface terminal (OIT) which shall be mounted in the SCC door. The OIT shall include 512 MB RAM, 512 MB Flash card, and the latest versions of all firmware and software. The OIT display shall be accessible and readily visible to operators without opening the door of the panel. The SCC shall communicate via RS-485 link to each PDC and HSC. The SCC shall communicate with the plant control system via Ethernet.

3. System operating information shall be displayed on the OIT screen in both color graphic and text format. The information shown on the screen must be continuously updated. As a minimum, the following information shall be displayed on the main screen simultaneously: number of channels/rows/banks/modules in service, influent and effluent isolation gate status, automatic level control device status, UV intensity, communication link status, system flow pace mode (hand or auto), UV lamp status, and effluent flow rate.

4. System command, control, and status shall be accomplished through the OIT display. In the event of a fault, the alarm/graphic color display shall change from red (operating) to amber (alarm), until the alarm has been manually or automatically acknowledged or cleared. Graphics shall continue to flash during alarm until the alarm has been acknowledged. Once acknowledged, the graphic shall remain solid amber until the alarm has cleared. Once the alarm has cleared, the graphic color shall return to the original state.

5. The SCC shall provide three levels of remote control: system level, channel level, and bank level.
   a. System level remote modes shall consist of Manual, Off, and Auto.
   b. Channel level remote modes shall consist of Manual, Out of Service, and Auto.
   c. Bank level remote modes shall be as described in Paragraph 2.09B.7.c above.

6. The SCC shall be capable of receiving the following signals, at a minimum.
   a. Bank 1A Not Sealed
   b. Bank 1B Not Sealed
   c. Bank 2A Not Sealed
   d. Bank 2B Not Sealed
   e. SBR
   f. SCC on UPS Power
   g. UPS Failure Condition
   h. Channel 1 High Water Level
   i. Channel 2 High Water Level
   j. Channel 1 Low Water Level
   k. Channel 2 Low Water Level
   l. Channel 1 Inlet Gate Ready
   m. Channel 2 Inlet Gate Ready
   n. Channel 1 Inlet Gate Open

© 2017 CDM Smith
All Rights Reserved

o. Channel 2 Inlet Gate Open
p. Channel 1 Inlet Gate Closed
q. Channel 2 Inlet Gate Closed
r. Channel 1 Weir Gate Ready
s. Channel 2 Weir Gate Ready
t. Channel 1 Weir Gate Position
u. Channel 2 Weir Gate Position
v. Flow Signal Input
w. UVT Signal Input
x. Channel 1 Water Level Signal Input
y. Channel 2 Water Level Signal Input

7. The SCC shall be capable of sending the following discrete outputs, at a minimum.
   a. Common Minor Alarm
   b. Common Major Alarm
   c. Common Critical Alarm
   d. Channel 1 Inlet Gate Open
   e. Channel 2 Inlet Gate Open
   f. Channel 1 Inlet Gate Close
   g. Channel 2 Inlet Gate Close
   h. Channel 1 Weir Gate Open
   i. Channel 2 Weir Gate Open
   j. Channel 1 Weir Gate Close
   k. Channel 2 Weir Gate Close

8. Alarms shall include the following. The alarm display shall identify the affected module and the actual component.

System Level	Criticality	Alarm Description
System	Critical	SCC Run on UPS
	Major	Low UV Dose
		Not Enough Healthy Channels (NEHC)
		UVT Meter Fault
		Low UVT – Out of Validation Range
		Low Flow Alarm
		Flow Meter Fault
		High Flow – Out of Validation Range
		PLC Fault
	Minor	PLC Low Battery
		UPS Fault
		System Power On Reset
		SCC Power Restored
		SCADA Fault
		System in Transition
		Low UVT Alarm
		UVT Below Design Value
		UVT Meter Override Value Used
		High UVT – Out of Validation Range
		Flow Meter Override Value Used
		Low Flow – Out of Validation Range

© 2017 CDM Smith
All Rights Reserved

System Level	Criticality	Alarm Description
HSC	Critical	HSC Hydraulic Tank Low Level
		HSC Pump Fault
	Major	SCC-HSC Communication Fault
	Minor	HSC Remote Wipe Inhibited
Channel	Critical	Channel Low Water Level
		Channel Water Level Signal Fault
		Inlet Gate Fail to Start Opening
		Weir Gate Position Signal Fault
	Major	Not Enough Healthy Banks Available
		Channel High Water Level
		Inlet Gate Fail to Open
		Inlet Gate Fail to Close
		Inlet Gate Fail to Start Closing
		Weir Gate Fail to Move
		Weir Gate Fault
		Weir Gate Not in Remote Auto
	Minor	Channel Low Water Level Warning
		Channel Out of Service
		Channel Failed to Complete Out of Service
		Channel Design Flow Exceeded
		Channel Maximum Flow Velocity Exceeded
		Channel Flow Limit for Wiping Exceeded
		Channel Wipers Remote Wipe Inhibited
		Inlet Gate Not in Remote Auto

System Level	Criticality	Alarm Description
Bank	Critical	PDC High Temperature Shutdown
		Bank Not in Place
	Major	SCC-PDC Communication Fault
		Multiple Lamp Failure
		Lamp Configuration Mismatch
		Not Enough Healthy Lamps
		Low UV Intensity
		UV Intensity Sensor Fault
		Wiper Group Jammed
		Wiper Travel Time Exceeded
	Minor	Bank Not Sealed
		Bank Not in Remote Auto
		PDC Fan Failure
		PDC Air Conditioner Failure
		PDC High Temperature Warning
		Lamp Failure
		Lamp Lifetime Exceeded
		Lamp Driver Failure
		Lamp Driver Communication Failure
		Row Turn Down Mismatch
		Low UV Intensity Warning
		UV Intensity Sensor Saturation

		UV Intensity Sensor Reference Check Active
		UV Intensity Sensor Reference Check Required
		Wiper Not in Remote
		Wiper Position Unknown

9. Information, such as individual lamp hours and cycles, shall be accessed using the touch screen display. Lamp cycles and hours shall be reset via a password-protected screen.

10. Provide a fully managed Ethernet switch (N-Tron Model 708FX2 with ST connectors) for communication on the existing plant's SCADA network. Provide fiber optic cable equipment for connection to the plant SCADA network, including but not limited to patch panel and patch cords, as specified in Section 13321.

11. The SCC shall be designed to operate off of a 120-VAC, 60-Hz supply.

12. An uninterruptible power supply (UPS) shall be provided for the SCC. Approved models are Allen Bradley 1609-U or Sola Hevi Duty SDU. Refer to Section 13330.

E. Hydraulic System Center (HSC)

1. Each HSC shall be floor-mounted, NEMA 4X Type 316L stainless steel as shown on the Electrical Drawings. The maximum size of the HSC enclosure shall be 48 inches high, 28 inches wide, and 24 inches deep. The two HSCs shall be located and oriented as shown on the Drawings. The door of each HSC shall swing open to the right.

2. Each HSC shall be designed to operate off of a 480 VAC, 3-phase power supply as shown on the Electrical Drawings.

3. Each HSC shall provide automatic wiping controls, manual wiping operations, and raising and lowering of UV banks. Monitoring of the hydraulic system shall also be performed by the HSC. Each HSC shall communicate with the SCC via RS-485 link.

4. Each HSC shall include the following switches.
   a. Main disconnect switch
   b. Wipe/Pivot selector switch
   c. Pivot Up/Down selector switch
   d. Pivot Individual Bank Control selector switch
   e. Main HSC Wiper Control selector switch
   f. Individual wiper group control selector switches
   g. Manual Retract and Extend switches for each wiper group and pivot arm

5. Provide one spare hydraulic pump.

6. Hydraulic hoses between the HSCs and the wipers and pivot arms shall be supplied by the UV Manufacturer and installed by the Contractor.

F. UV Transmittance Monitor (Tag No. AE/AIT-810)

1. Provide a UV transmittance spectrophotometer suitable for measurement of the transmittance of tertiary filter effluent at a germicidal wavelength of 253.7 nm. Unit shall be suitable for continuous online measurement and for use as dose pacing. Provide local

indication of the transmittance (0–100 percent) and terminal blocks for a 4-20 mA output proportional to the measured transmittance. Provide smoothing algorithm to attenuate temporary spikes in the signal, and allow manual setpoint entry to override measured transmittance. The unit shall consist of a UV light source, filter, 10-mm sample cell, and a detector. Transmittance shall be measured with a minimum accuracy of plus/minus 1 percent of actual value and have a 30-second maximum response time.

2. The monitor shall incorporate a display screen for visual trend analysis on a 60-minute or 24-hour basis and shall be housed in a NEMA 4X Type 316 stainless steel enclosure suitable for wall mounting. The monitor shall be designed to operate off of a 120 VAC, 60-Hz supply.

3. A UPS shall be provided for the UV transmittance monitor enclosure. Approved models are Allen Bradley 1609-U or Sola Hevi Duty SDU. Refer to Section 13330.

G. Flow or Dose Pacing Control Modes

1. The UV disinfection system shall be designed to operate in either "flow-pacing" or "dose-pacing" mode.
   a. For systems designed around flow-pacing, lamp output or number of lamps in service shall be adjusted based on the measured flow rate and the measured UV transmittance. On loss of flow signal from the plant control system, or by operator selection, it shall be possible to do either of the following:

      i. Default to full power in the lamps.
      ii. Adjust the lamp output or number of lamps in service based on a manually entered flow value at the local OIT and the measured UV transmittance.

      On loss of UVT signal from the plant control system, or by operator selection, it shall be possible to do either of the following:

      i. Default to full power in the lamps.
      ii. Adjust the lamp output or number of lamps in service based on flow signal and a manually entered UVT value at the local OIT.

   b. For systems designed around dose-pacing, lamp output or number of lamps in service shall be adjusted based on measured flow rate and the measured UV intensity. On loss of flow signal from the plant control system, or by operator selection, it shall be possible to do either of the following:

      i. Default to full power in the lamps.
      ii. Adjust the lamp output or number of lamps in service based on a manually entered flow value at the local OIT and the measured UV intensity.

      On loss of UV intensity signal from the plant control system, or by operator selection, it shall be possible to do either of the following:

      i. Default to full power in the lamps.
      ii. Adjust the lamp output or number of lamps in service based on flow signal and a manually entered UV intensity value at the local OIT.

© 2017 CDM Smith
All Rights Reserved

2. The UV system shall be capable of automatically adjusting the number of lamps in service by turning rows of lamps on and off within each bank of UV modules. The system shall also be capable of automatically adjusting the output of each lamp from 30 to 100 percent, in 1 percent increments.

3. The UV system design shall allow the operator an option to operate the UV system in either manual or automatic modes.

H. Level Monitoring

1. Provide one ultrasonic level transmitter for each UV channel (Tag Nos. LE/LIT-815-1 and LE/LIT-815-2) to monitor the water level in the channels. Alarms shall be configured to automatically shut down the UV Modules in the event of a low level in the channel, before any damage occurs to any part of the system.

2. Transducers shall be provided with integral temperature sensors for temperature compensation at temperature ranges from -50°C to 150°C. Transducers shall be potted/encapsulated in a Kynar or other chemical and corrosion-resistant housing. The surface of transducers shall be capable of being completely submerged without damage. Transducers shall be suitable for surface, pipe or flange mounting. Appropriate mounting hardware shall be provided.

3. Transmitters shall be microprocessor based and compatible with the transducers provided. Resolution shall be plus or minus 0.1 percent of range or 0.08 inches, whichever is greater. Accuracy shall be plus or minus 0.25 percent of range or 0.24 inches, whichever is greater. Transmitters shall have one isolated 4-20 mA output and alarm contacts as needed, adjustable to trip at any point in the instrument range. Output contacts shall be rated 5A at 230VAC.

4. The 4-20 mA signals shall be wired to the UV SCC, and the level in each UV channel shall be displayed on the SCC Operator Interface and on the Plant SCADA System.

5. Provide one (1) hand held programmer where required for configuration and calibration of the instrument.

6. Ultrasonic level transmitter shall be one of the following:
   a. Siemens/Milltronics HydroRanger.
   b. Rosemount 3490 Series.
   c. Dwyer UTC/UTS.
   d. Endress+Hauser.

7. Provide one high level switch and one low level switch in each channel (four total, Tag Nos. LSH-815-1, LSH-815-2, LSL-815-1 and LSL-815-2) to trigger alarms and shut down the system to protect against high or low water level conditions.

I. Remote Monitoring

1. The SCC shall include capabilities for remote monitoring by means of an Ethernet data highway connection to the plant instrumentation and control system.

© 2017 CDM Smith
All Rights Reserved

2. The following data, at a minimum, shall be available to be read from the UV PLC by the plant control system.
   a. Common Minor Alarm
   b. Common Major Alarm
   c. Common Critical Alarm
   d. Common HSC Alarm
   e. Low UV Dose Alarm
   f. Flow Meter Fault
   g. UVT Analyzer Fault
   h. Low UV Transmittance Alarm
   i. SCC Running on UPS Power
   j. Watchdog Pulse
   k. System Flow
   l. Calculated System UV Dose
   m. UV Transmittance
   n. Channel 1 in Operation
   o. Channel 2 in Operation
   p. Channel 1 Low Water Level Alarm
   q. Channel 2 Low Water Level Alarm
   r. Channel 1 High Water Level Alarm
   s. Channel 2 High Water Level Alarm
   t. Channel 1 Common Inlet Gate Fault
   u. Channel 2 Common Inlet Gate Fault
   v. Channel 1 Inlet Gate Not Closed
   w. Channel 2 Inlet Gate Not Closed
   x. Channel 1 Weir Gate Fault
   y. Channel 2 Weir Gate Fault
   z. Channel 1 Weir Gate in Remote
   aa. Channel 2 Weir Gate in Remote
   bb. Channel 1 Mode
   cc. Channel 2 Mode
   dd. Channel 1 Weir Gate Position
   ee. Channel 2 Weir Gate Position
   ff. Channel 1 Water Level
   gg. Channel 2 Water Level
   hh. Bank 1A in Operation
   ii. Bank 1B in Operation
   jj. Bank 2A in Operation
   kk. Bank 2B in Operation
   ll. Bank 1A Major Alarm
   mm. Bank 1B Major Alarm
   nn. Bank 2A Major Alarm
   oo. Bank 2B Major Alarm
   pp. Bank 1A Lamp Hours
   qq. Bank 1B Lamp Hours
   rr. Bank 2A Lamp Hours
   ss. Bank 2B Lamp Hours
   tt. Bank 1A Lamp Power
   uu. Bank 1B Lamp Power
   vv. Bank 2A Lamp Power
   ww. Bank 2B Lamp Power

© 2017 CDM Smith
All Rights Reserved

3. The following data, at a minimum, shall be available to be written from the plant control system to the UV PLC.
   a. UV System Total Flow
   b. SBR System Flow Present
   c. SCADA Heartbeat Signal

4. UV data shall be placed in contiguous registers by the UV Manufacturer. One set of registers shall be provided for writing discrete-type information and one set shall be provided for reading discrete-type information. One set of registers shall be provided for writing floating-point information and one set shall be provided for reading floating-point information.

5. Provide a memory map of PLC registers and OIT screens to the PCSS no later than 30 days prior to the scheduled shipment of the vendor equipment to the site. Coordinate with the PCSS to ensure a compatible configuration of the SCC to match the plant's Ethernet network.

J. Environmental Controls

1. Panels shall be provided with sun shields, heat sinks, or air conditioning units as required to prevent temperature buildup inside of panel. The internal temperature of all panels shall be regulated to a range of 45 degrees F to 104 degrees F under all conditions. Under no circumstances shall the panel cooling or heating equipment compromise the NEMA rating of the panel.

2. Submit heat dissipation calculations for every control panel.

3. Provide an air conditioner for panels with internal heat that cannot be adequately dissipated with natural convection and heat sinks.

4. Provide custom fabricated sun shields for all outdoor panels in accordance with the following requirements. The manufacturer's standard sun shields are acceptable provided that submittal data demonstrates that they meet the design intent specified herein.
   a. Sun shields shall be fabricated from minimum 12 gauge Type 316 stainless steel. Units shall be designed, fabricated, installed, and supported to fully cover and shade the top, sides and back of the enclosure, and to partially shade the front panel of the enclosure, from direct exposure to sunlight from sunrise to sunset.
   b. Depending on overall size, sun shields may be fabricated in single or multiple segments for attachment to the enclosure support framing or to separate free standing framing around the enclosure.
   c. Sun shields shall not be attached directly to the enclosure by drilling holes through, or welding studs to, the enclosure surfaces, and shall be designed and mounted to provide a minimum 3-inch air gap all around the enclosure for air circulation and heat dissipation.
   d. The top section of all sun shields shall be sloped at a minimum angle of 5degrees from horizontal. For wall mounted enclosures, the top section shall slope downward away from the wall and towards the front of the enclosure. For free standing, floor mounted and frame mounted enclosures the top section shall slope downward towards the back side of the enclosure.

© 2017 CDM Smith
All Rights Reserved

e. The front edge of the top section of all sun shields shall incorporate a narrow and more steeply sloped drip shield segment which sheds water away from the front of the enclosure and prevents it from dripping or running directly onto the front panel of the enclosure.
f. All seam welds used in sun shield fabrication shall be continuous and shall be ground smooth.
g. All exposed corners, edges and projections shall be smooth rounded or chamfered to prevent injury.

5. All outdoor enclosures and enclosures located in unheated areas indoors or in areas subject to humidity and moisture shall be provided with an integral heater, fan, and adjustable thermostat to reduce condensation and maintain the minimum internal panel temperature. Mount the unit near the bottom of the enclosure with discharge away from heat-sensitive equipment. Heater shall be Hoffman DAH series or equal.

6. In addition to the heater, all PLC/RTU enclosures shall include an additional temperature control switch that shall report high temperature alarm to SCADA by means of a normally closed contact. Temperature setting shall be adjustable with a default of 90°F. Temperature switch shall be Hoffman ATEMNC or equal.

PART 3 EXECUTION

3.01 INSTALLATION

A. Installation shall be in accordance with the Construction Sequence in Section 01014.

B. Installation shall be in strict accordance with the manufacturer's written instructions and recommendations in the locations shown on the Drawings. Anchor bolts shall be furnished under this Section by the equipment manufacturer, for installation under Section 11002, in accordance with the manufacturer's recommendations. Anchor bolts and associated hardware shall be of Type 304 stainless steel unless otherwise specified.

C. Local electrical shutoffs for power supplied to field equipment shall be provided.

D. The UV Manufacturer’s representative shall attend a pre-installation meeting with the Contractor and Engineer to review general procedures, erection and installation instructions, and installation sequence.

E. The UV Manufacturer's representative shall inspect the installation and supervise any required modifications, additions, or other changes required to allow the UV Manufacturer to certify per Paragraph 3.07 that the complete installation is appropriate and is expected to operate as expected.

3.02 GENERAL TESTING REQUIREMENTS

A. Coordinate all field tests in this Section with field tests included in Section 11282 as applicable and Section 01665. Field tests shall include all equipment included under this Section.

B. Submit field test procedures in accordance with Section 01665.

© 2017 CDM Smith
All Rights Reserved

C. Pre-Operational Checkouts: After the equipment in this Section and in Section 11282 has been completely installed, under the direction of the manufacturer's factory representative, conduct in the presence of the Engineer such tests as are necessary to ensure that all equipment conforms to this Section.

1. Supply all necessary temporary power and water.

2. Following successful completion of Pre-Operational Checkouts, submit copies of the manufacturer's field service technician's report and the Equipment Manufacturer's Certificate of Installation, Testing and Instruction in accordance with Section 01665, Paragraph 1.03.A.4.

D. Functional Testing: Refer to Section 01665 and Paragraph 3.03 of this Section.

E. Complete System Commissioning: Refer to Section 01665 and Paragraph 3.04 of this Section.

F. If the performance of any part of the system does not meet the requirements specified, corrective measures shall be taken, and equipment shall be removed and replaced with equipment that satisfies the conditions specified. All expenses associated with field testing, including any corrective action, shall be borne by the Contractor.

G. The Contractor shall provide the required manpower, equipment, and materials needed to conduct all tests, except routine effluent testing. Provide the services of a certified independent laboratory, approved by the Engineer, to conduct all required laboratory analyses during performance testing, except during the routine effluent testing. Laboratory testing during the routine effluent test will be conducted by the Owner's laboratory.

H. The Owner shall have the authority to suspend or cancel any scheduled testing, without prior notice to the Contractor, if suspension or cancellation of testing is necessary to preserve the operational capability of the treatment facility.

I. The Contractor shall notify the Engineer and Owner, in writing, of the proposed dates of functional testing and performance testing not less than two weeks (14 calendar days) before the proposed start of each test.

J. The Contractor shall remove UV equipment from the existing UV system structure after the new UV system is completely tested, successfully operating, and accepted by the Owner per Paragraph 3.06A. Refer to Section 01014.

3.03 FUNCTIONAL TESTING

A. Prior to startup, the UV Manufacturer's representative shall inspect the installed UV disinfection system for proper alignment, correct operation, proper connection, and satisfactory function of all components. The UV Manufacturer's representative shall approve the installation and provide certification that the system components have been installed correctly and are ready for operation.

B. Proposed functional testing procedures shall be developed by the UV Manufacturer, submitted to the Engineer, and approved by the Engineer not less than two weeks (14 calendar days) prior to scheduling and performing the functional test. The Engineer will coordinate testing procedures and scheduling with the Owner.

© 2017 CDM Smith
All Rights Reserved

C. Functional testing shall take place in the presence of the PCSS.

D. Functional testing shall include proof of the fiber optic ethernet interface between the UV SCC and the plant control system. All functions to be monitored and controlled by the plant's SCADA system shall be tested to ensure correct functionality prior to final acceptance of the UV system. All I/O points, OITs, and remote controls shall be tested to ensure correct functionality.

E. Functional testing will be witnessed by the Engineer and Owner and shall demonstrate the system and related control system operate in accordance with the Specifications, including all operating, monitoring, and shutdown functions.

F. If, in the opinion of the Engineer and Owner, the system meets the requirements specified herein, the system will advance to the performance testing.

G. If, in the opinion of the Engineer and Owner, the functional tests do not meet the requirements specified herein, performance testing will not begin until the UV Manufacturer has made, at no cost to the Owner, such adjustments, changes, and/or additions as necessary to correct the system and demonstrated this by a satisfactory functional test as specified above.

H. If, after the initial functional test, it is necessary for the Engineer to return to the site and attend re-testing after corrections have been made, then the Engineer's costs to attend these subsequent functional tests, including travel, lodging and meals, shall be reimbursed by the Contractor.

3.04 PERFORMANCE TESTING

A. The UV Manufacturer shall submit the proposed performance testing procedures, including the qualifications of the independent laboratory that will perform all required analyses during performance testing, for the Engineer's review and approval not less than two weeks (14 calendar days) before scheduling and executing the performance test.

B. The preliminary performance tests shall include intensive effluent quality tests, preliminary lamp output tests, power consumption tests, and headloss measurements.

C. The final performance tests shall include routine effluent quality tests and final lamp output tests.

D. The guaranteed final effluent quality shall only be considered to be achieved when both the intensive and routine tests demonstrate that the system meets the performance requirements of this specification within the power consumption range predicted by the UV Manufacturer.

E. All laboratory tests necessary to confirm the performance testing for the UV disinfection system shall be performed in conformance with the applicable portions of the most recent edition of *Standard Methods*.

F. The Contractor shall arrange and pay for all laboratory testing and associated costs required during the preliminary performance testing phase of the effluent quality tests at a laboratory approved by the Engineer.

© 2017 CDM Smith
All Rights Reserved

G. The Contractor shall arrange and pay for all costs associated with the power consumption testing by an experienced company certified in conducting this type of work. Qualifications of the power consumption testing company shall be approved by the Engineer not less than two weeks (14 calendar days) prior to the start of power consumption testing.

H. Preliminary Performance Tests

1. Intensive Effluent Quality Test
   a. The UV Manufacturer shall conduct one intensive effluent quality test. The purpose of the intensive effluent quality test is to confirm that the system is capable of producing the stated final effluent quality under the specified worst-case design conditions (*i.e.,* peak flow, minimum UV dose, the lowest UV transmittance, and the highest suspended solids), and power consumption does not exceed the system peak power consumption specified.
   b. If, during the test period, the UV influent conditions are significantly better than the worst-case design conditions, the intensive effluent quality test shall be conducted under actual plant flow conditions, and the UV Manufacturer shall propose measures such as spiking the influent with mixed liquor, and delivering an adjusted UV dose to simulate the worst-case design influent conditions as closely as possible, if required by the Engineer.
   c. The intensive effluent quality test shall be carried out as soon as the functional tests of all individual equipment are completed satisfactorily. The duration of the intensive test program shall be 5 days. If the UV system is forced to shut down during this test, then the 5-day test shall be repeated until it is satisfactorily passed.
   d. Prior to the start of the intensive effluent quality test, the UV Manufacturer shall propose the number, location, and power outlet of online UV lamps based on the measured filtered UV transmittance and average lamp age and the average UV dose to be delivered. The lamps shall be cleaned at the frequency recommended by the UV Manufacturer and approved by the Engineer. UV dosage shall be calculated based on a clean lamp.
   e. The timing for the test shall be determined based on the diurnal flow variations and the laboratory working hours.
   f. On each day during the intensive effluent quality test, 10 sets of grab samples from the UV influent and 10 sets of grab samples from the effluent of the UV disinfection facility shall be collected and analyzed for *E. coli* by the Contractor. At the time these samples are collected, the following information shall be recorded:
      1) Date and time
      2) UV intensity
      3) Lamp age
      4) UV transmittance reading from UVT monitor
      5) Power output levels
      6) Effluent flow rates

      In addition to being analyzed for *E. coli* concentrations, the UV influent samples shall also be analyzed for the following:
      1) UV transmittance (filtered and unfiltered)
      2) Total suspended solids
      3) $CBOD_5$
   g. The intensive effluent quality test will be considered to be successful if testing performed demonstrates all of the following:
      1) The geometric mean of the final effluent *E. coli* concentrations from the 50 samples is less than 126 CFU/100 mL.

© 2017 CDM Smith
All Rights Reserved

2) The *E. coli* level is less than 941 CFU/100 mL for any samples analyzed.
3) Power consumption does not exceed system peak power consumption as specified.

2. Preliminary Lamp Output Testing
   a. The UV Manufacturer shall submit the proposed lamp output testing procedures to the Engineer for approval not less than two weeks (14 calendar days) before scheduling and executing the testing.
   b. The UV Manufacturer shall conduct testing of 10 percent of the total in-service UV lamps at 100 hours of operating time, referred to as the initial lamp output test, in accordance with Paragraph 1.06G.2.
   c. Lamp output shall be tested at room temperature in a dark room using a calibrated International Light model 1700 radiometer to test the irradiance of the lamp at a 3-meter distance. The lamp shall be tested vertically with the irradiance readings taken at its center.

3. Power Consumption & Harmonic Testing
   a. Guaranteed performance requirements for power consumption shall be measured at the 3-phase feeder entering each PDC. The power consumption per lamp including ballast losses is calculated to be the total power draw divided by the number of lamps powered by the PDC. Measurement shall be taken when all lamps in all modules in the channel are ON and set to full power. Kilowatt-hours and power factor shall be measured and recorded. Measurements shall be made using a kilowatt-hour meter temporarily mounted at the location stated. The meter manufacturer shall have calibrated the meter within the 6 months immediately preceding the test.
      1) Power consumption testing shall be conducted within 1 month of startup of the system at a time when all components are functioning satisfactorily.
      2) If, for any reason, additional lamps are required after installation in order to meet performance requirements, the power consumption guarantee based on the initial number of lamps shall remain in effect.
   b. The power testing apparatus shall be provided by the Contractor. Testing shall be conducted under supervision by a vendor technician.
   c. Harmonic Testing
      1) The UV Manufacturer shall employ an independent contractor experienced in making electrical system harmonic content field measurements and analysis to measure the harmonic content of the system.
      2) The harmonic current and voltage attributable to the UV disinfection system as measured in the power distribution system shall be measured for all bank configurations prior to final acceptance. The point of common coupling is defined as the line side terminals of the isolation transformer feeding the PDC. If the measured harmonic current and voltage does not comply with Tables 10.2 and 10.3 of IEEE 519-1992, then the UV Manufacturer shall make modifications to limit the harmonic distortion through their equipment.
      3) Additional filters or other harmonic mitigating equipment shall be provided, at no additional cost to the Owner, if field measurements show an excess of harmonic content.

4. Headloss Measurements
   a. The Contractor shall perform headloss measurements, in accordance with the testing procedures proposed by the UV Manufacturer and approved by the Engineer, in order to confirm that the total headloss does not exceed the limits specified in Paragraph 1.06G.5.

© 2017 CDM Smith
All Rights Reserved

5. Six-Month Trial Period
   a. Upon successful completion (as determined by the Engineer's review and approval of testing reports) of the intensive effluent quality test, the preliminary lamp output testing, power consumption testing, and headloss testing, the routine effluent quality test programs specified in Paragraph 3.04I shall commence. The first 6 months of the routine effluent quality test shall also serve as a trial period to confirm long-term effluent compliance.

I. Final Performance Testing

1. Routine Effluent Quality Test
   a. The purpose of the routine effluent quality test is to confirm the satisfactory performance in terms of effluent quality and power consumption at the end of lamp life of the UV system under actual operating conditions. The duration of the test shall be 12 consecutive months.
   b. Five days per week, one grab sample for effluent of the UV disinfection facility will be collected and analyzed for *E. coli* levels. At the time these samples are collected, the following information shall be recorded:
      1) Date and time
      2) UV intensity
      3) Lamp age
      4) UV transmittance reading from UVT monitor
      5) Power input to the UV disinfection system at the SCC
      6) Effluent flow rates

      In addition to being analyzed for *E. coli* levels, the UV influent samples shall also be analyzed for the following in the Owner's laboratory:
      1) UV transmittance (filtered and unfiltered)
      2) Total suspended solids
      3) $CBOD_5$
   c. The actual number of online UV lamp modules shall be determined based on the specified operating strategy.
   d. The UV Manufacturer shall provide the Owner with procedures for implementation of the routine test program. The Owner shall implement all actions required during the routine testing program (sample collection, laboratory analyses, and data recording). The UV Manufacturer shall observe the implementation of the program by the Owner until the UV Manufacturer is satisfied that the procedures are being implemented properly.
   e. The routine effluent quality tests are considered to be successful if, during the final three months of the 12-month test period, testing demonstrates all of the following when the UV influent characteristics are not worse than the design criteria:
      1) The geometric mean of the final effluent *E. coli* levels, based on consecutive daily samples on each calendar month, does not exceed the geometric mean listed in Paragraph 1.06F.1.d.
      2) The samples collected do not exceed the maximum daily *E. coli* limits listed in Paragraph 1.06F.1.d.
      3) The design UV dose is delivered for a consecutive 1-year period.
      4) The system power consumption at the end of lamp life does not exceed the specified consumption.

© 2017 CDM Smith
All Rights Reserved

f. The UV Manufacturer or his representative shall satisfy himself regularly, over the 1-year routine testing period, that sampling and laboratory analytical techniques performed by the Owner are in accordance with standard protocol. Manufacturer activities during the routine testing program may include verification of operating conditions, regular review of testing results, and quality control checks of sampling and analytical techniques. The UV Manufacturer shall immediately notify the Engineer in writing of any procedures or techniques which are observed to not be in accordance with standard protocol.

g. Procedure for Permit Violations
   1) At any time during the first nine months of the 12-month routine effluent quality test period, if the test results indicate an exceedance of either the permitted monthly geometric mean or the permitted daily maximum *E. coli* concentration when the UV influent characteristics are not worse than the design criteria, then the UV Manufacturer shall provide the services of a factory-trained technician, as given in Paragraph 1.05, within 24 hours of receipt of written notice from the Owner. The UV Manufacturer's technician shall immediately perform diagnostics and repairs necessary to prevent further permit violations.
   2) Upon completion of repairs, the three-day intensive effluent quality test as defined in Paragraph 3.04H.1 shall be repeated. The UV Manufacturer shall provide the required manpower, equipment, and materials needed to perform system diagnostics and repairs, and to repeat the intensive effluent quality test. The UV Manufacturer shall utilize the services of a certified independent laboratory, approved by the Engineer, to conduct all required laboratory analyses during the intensive effluent quality test.
   3) The intensive effluent quality test shall be considered to be successful if testing performed under actual worst-case design conditions demonstrates compliance with Paragraphs 3.04H.1.g.1 and 3.04H.1.g.2.
   4) Upon successful completion of the intensive effluent quality test, the routine effluent quality test shall resume.
   5) If three permit violations occur within the routine effluent quality test period when the UV influent characteristics are not worse than the design criteria, then the UV system shall be replaced by the UV Manufacturer at no additional cost to the Owner. The UV Manufacturer shall provide temporary disinfection until the new disinfection system is installed and successfully tested.

2. Final Lamp Output Testing
   a. The UV Manufacturer shall utilize the same testing procedures as used in the preliminary lamp output testing.
   b. The UV Manufacturer shall conduct final output testing of the same UV lamps that were tested during the preliminary lamp output test after 5,000 hours of operation.
   c. The final lamp output test shall be considered successful if the output of each of the UV lamps tested is 80 percent or greater than the output recorded during the preliminary lamp output test. Lamp life is defined as the number of operating hours before the UV output at 254 nm drops to 80 percent of the new lamp UV output at 254 nm after 100 hours of operation per Paragraph 1.06G.2.

3.05 SUPERVISION, CERTIFICATION, AND REPORT OF TESTING

A. The UV Manufacturer's representative shall supervise the functional testing, the intensive portion of the effluent quality testing, the preliminary and final lamp output tests and the power consumption tests, analyze data, and certify the system's performance during the tests. Tests

shall be documented during continuous operation of the system, and the UV Manufacturer shall submit to the Engineer three copies of a complete report containing all data, calculations, lab report sheets, and a description of the preliminary performance testing procedures and results, including preliminary lamp output testing. Once the final lamp output test is complete, the UV Manufacturer shall submit to the Engineer three copies of a complete report containing all data, calculations, lab report sheets, and a description of all of the lamp output testing procedures and results.

3.06 ACCEPTANCE/NONACCEPTANCE OF SYSTEM

A. If, in the opinion of the Engineer and Owner, the system meets the performance requirements during the preliminary performance testing specified herein, the total headloss does not exceed the limits specified in Paragraph 1.06G.5, and the Owner has received the executed Warranty Bond specified in Paragraphs 1.08 and 3.08, the Engineer will recommend to the Owner, by letter, the official acceptance/approval of the UV disinfection system and the Owner will begin the routine effluent quality test. If, in the opinion of the Engineer and Owner, the test results do not meet the performance requirements during the preliminary performance testing specified herein, the Engineer will notify the UV Manufacturer and the Owner in writing of the non-acceptable performance.

B. In the case of non-acceptable performance, the UV Manufacturer shall then have 60 days in which to perform, at the UV Manufacturer's sole expense, any supplemental testing, equipment adjustment, changes, or additions and request an additional retest of the non-acceptable system.

C. Should the UV system fail to meet the requirements of the Specifications or the performance requirements after three attempts, the UV Manufacturer shall remove the system and replace it with one that will meet the performance requirements.

D. If the ultraviolet disinfection system succeeds in meeting the specified wastewater effluent requirements, but fails in meeting the Guaranteed Power Consumption, the Owner may choose to accept the equipment. If the Owner accepts the equipment in this case, liquidated damages will be assessed and levied on the UV Manufacturer. The liquidated damages will be calculated on the basis of the Guaranteed Power Consumption. The liquidated damages shall be calculated according to the following formula. The maximum value of the liquidated damages shall be equal to the UV system price listed in the Bid Form.

Liquidated Damages in Dollars =

$(P_i - P_g)$ kVA x 365 days/yr x 24 hours/day x \$0.095/kWh x 12.46 x N_b

Where:

P_i = (Average power input measured over a 24-hour period during the Power Consumption & Harmonic Testing to the line side of the isolation transformer) / (Guaranteed Power Factor as stated in Paragraph 1.06G.3). Power input (P_i) shall be based on the average power input measured during the Power Consumption & Harmonic Testing described herein at full lamp intensity.

P_g = (Guaranteed Power Consumption as stated in Paragraph 1.06G.3) / (Guaranteed Power Factor as stated in Paragraph 1.06G.3)

© 2017 CDM Smith
All Rights Reserved

12.46 = Present Worth Factor based on i = 5% and n = 20 years.

N_b = Number of banks in UV system

3.07 MANUFACTURER'S CERTIFICATION

A. Submit a letter from the UV Manufacturer stating that he has inspected the installation and checked its performance and certifies that the installation is satisfactory, that the system is operating correctly, and that the system meets all the requirements of this section.

3.08 WARRANTY BOND DELIVERY

A. Following installation, startup testing, and satisfactory completion of preliminary performance testing, delivery of all required parts, chemicals, documents, and other items required above, submit the executed warranty bond required in Paragraph 1.08 directly to the Owner.

END OF SECTION

© 2017 CDM Smith
All Rights Reserved

SECTION 11366
POST-DEWATERING SCREW PRESSES

PART 1 GENERAL

1.01 SCOPE OF WORK

A. Furnish all labor, materials, equipment and appurtenances required and install complete and make ready for operation two Post-Dewatering Screw Presses, as shown on the Drawings and as specified herein.

B. The System Supplier shall be responsible for providing as a complete, integrated package the sludge dewatering system, including the following items:

1. Two (2) Post-Dewatering Screw Presses (Tag Nos. SP-7010-1 and SP-7010-2) with flocculation tanks.

2. Two (2) Pneumatic Panels complete with one (1) Air Compressor and Receiver Tank.

3. Two (2) Main Control Panels.

4. The system shall include drive motors, power factor correction capacitors (if required), gear reducers, support legs, anchor bolts, controls, and all accessories and appurtenances specified or otherwise required for a complete and properly operating installation.

C. Electric motors shall be furnished and installed as part of the work of this Section and shall conform to the requirements of Section 16150.

D. Variable frequency drives (VFDs) shall be furnished by the System Supplier, installed in the control panels as specified, and shall conform to the requirements of Section 16191, Paragraph 2.03.

1.02 RELATED WORK

A. Concrete bases for equipment and installation of anchor bolts are included in Division 3, but anchor bolts shall be furnished under this Section.

B. Concrete work is included in Division 3.

C. Polymer dilution systems are included in Section 11246.

D. Sludge feed pumps and polymer solution feed pumps are included in Section 11315.

E. Instrumentation and controls provided in this Section shall adhere to the requirements in Division 13.

F. Post-dewatering screw conveyor system is included in Section 14555.

G. Mechanical piping, valves, pipe hangers and supports are included in Division 15.

H. Electrical work is included in Division 16.

© 2017 CDM Smith
All Rights Reserved

1.03 SUBMITTALS

A. Submit, in accordance with Section 01300, copies of all materials required to establish compliance with this Section. Submittals shall include the following:

1. Certified shop drawings showing all important details of construction, dimensions and anchor bolt locations.

2. Descriptive literature, bulletins and/or catalogs of the equipment.

3. Wiring diagrams, control schematics, and control panel outline drawings. Coordinate with other electrical control devices operating in conjunction with the speed control system for the DC drive controllers.

4. Noise data as specified in Section 01100.

5. Complete data on motors and power factor correction capacitors in accordance with Division 16. Gear reducer data shall include service factor, efficiency, torque rating and materials.

6. The layout of all control panel faces.

7. The total weight of the equipment, including the weights of the larger components.

8. A complete bill of materials for all equipment.

9. A list of the manufacturer's recommended spare parts with the manufacturer's current price for each item. Include gaskets, etc., on the list. List the bearings by the bearing manufacturer's numbers only.

10. Complete description of surface preparation shop prime and finish painting.

11. Complete data on variable frequency drive controllers as specified in Division 16.

12. Test reports. Upon testing of the installed system, field test reports shall be submitted in booklet form showing field tests performed to adjust each component and field tests performed to prove compliance with the specified performance criteria. Each test report shall indicate the final position of controls.

13. Warranty information in accordance with Section 01740.

14. Provide a memory map of PLC registers and OIT screens to the PCSS no later than 30 days prior to the scheduled shipment of the vendor equipment to the site. Coordinate with the PCSS to ensure a compatible configuration of the SCC to match the plant’s Ethernet network.

B. Operation and Maintenance Data

1. Operating and maintenance instructions shall be furnished to the Engineer as provided for in Section 01730. The instructions shall be prepared specifically for this installation and shall include all cuts, drawings, equipment lists, descriptions that are required to instruct operating and maintenance personnel unfamiliar with such equipment.

© 2017 CDM Smith
All Rights Reserved

2. Provide the services of a factory-trained service engineer, specifically trained on the type of equipment specified to check the equipment installation, supervise initial startup, and instruct the Owner's personnel in proper operation and maintenance of the equipment and supporting systems. A minimum of two (2) separate trips to the site will be required, consisting of a minimum of five (5) 8-hour working days. These hours are exclusive of travel time. Regardless of the time spent at the site, services will not be considered complete until the system operates as intended for a minimum of one (1) week of operation.

C. In the event that it is impossible to conform to certain details of the specifications due to different manufacturing techniques, describe completely all nonconforming aspects.

1.04 REFERENCE STANDARDS

A. American Bearing Manufacturers Association (ABMA)

B. Anti-Friction Bearing Manufacturers Association (AFBMA)

C. American Gear Manufacturers Association (AGMA)

D. American Institute of Steel Construction (AISC)

E. American National Standard Institute (ANSI)

F. American Structures Painting Council (ASPC)

G. ASTM International (ASTM)

H. American Welding Society (AWS) Publications

I. National Electrical Manufacturers Association (NEMA)

J. National Fire Protection Association (NFPA)

K. Occupational Safety and Health Administration (OSHA). Where reference is made to one of the above standards, the revision in effect at the time of bid opening shall apply.

1.05 QUALITY ASSURANCE

A. The equipment specified herein shall form a complete sludge dewatering system, and shall be manufactured by a reputable firm having a minimum of five (5) years of experience in the production of such equipment.

B. The System Supplier shall provide documentation of having provided at least three (3) systems of similar size in the US, operating for a minimum of one (1) year, and systems of similar or greater complexity.

C. Equipment shall have the manufacturer's name, address, type or style, model or serial number, and catalog number on a plate secured to the item of equipment.

© 2017 CDM Smith
All Rights Reserved

D. Submit the name, address, and phone number of the firm that will provide required repair or replacement during the warranty period.

E. All welding shall be performed in accordance with AWS D1.1 Structural Welding Code or equal.

1.06 SYSTEM DESCRIPTION

A. The Post-Dewatering Screw Presses shall be located in the Post-Dewatering Room on the second floor of the Solids Processing Building. Each screw press shall be suitable for operation under the following conditions and as specified in PART 2.

1. Number of Units: Two (one duty, one standby)

2. Equipment Tags: SP-7010-1 & SP-7010-2

3. Feed Sludge: Anaerobically digested, hydrolyzed, polymer- and alum-conditioned waste activated sludge, with or without dilution water (plant water)

4. Feed Sludge Concentration:
   a. Without dilution water: 5 to 6 percent dry solids
   b. With dilution water: 4 percent dry solids
   c. Volatile solids (VS): 45 to 55 percent

5. Maximum Sludge Feed Rates:
   a. Without dilution water: 40 gpm (1,200 lbs/hr at 6% solids)
   b. With dilution water: 60 gpm (1,200 lbs/hr at 4% solids)

6. Polymer Concentration & Feed Rate: 0.2 to 0.5 percent active, 6 to 17 gpm per screw press

7. Maximum Polymer Consumption: 30 pounds active polymer per dry ton solids

8. Alum Concentration & Feed Rate: 48 percent, 0.83 to 100 gph per screw press

9. Dewatered Sludge Concentration: minimum 25% dry solids

10. Solids Capture Efficiency: 95%

11. Spray Wash Rate (Min): 75 gpm

12. Spray Wash Pressure (Min): 70 psi

B. The drive motor shall have the following characteristics:

1. Horsepower: 5 HP minimum, 7.5 HP maximum

2. Speed: 1680 rpm

3. Voltage: 460V, 3 phase, 60 Hz

© 2017 CDM Smith
All Rights Reserved

4. Rating: TEFC, Severe Duty

5. Control: Variable Frequency Drive

C. All components of the screw press shall be so balanced that jamming at any point will not result in structural failure, but will cause the drive motor to stall. All components, including the gear reducer, shall be designed to withstand, without damage or permanent distortion, the full stalling torque of the drive motor.

D. The physical layout shown on the Drawings is based on the ROTAMAT® RoS 3Q 800 with flocculation piping by Huber Technology, Inc., Huntersville, North Carolina. The Solids Processing Building has been designed structurally to support this model and configuration. Model FSP 802 by Schwing Bioset, Inc., Somerset, Wisconsin, or Model ISGK-A-0906 by Ishigaki USA Ltd., Portsmouth, New Hampshire, may also be provided. If equipment by Schwing Bioset, Inc., Ishigaki USA Ltd., or the Q-Press 800.2 by Huber Technology, Inc., is to be supplied, the Engineer shall redesign the structure during construction. Any adjustments in the piping, liquids and solids discharges, cake conveyors, support configuration, electrical, and instrumentation design may also be necessary depending on the equipment selected. Any increase in the quantity of concrete and reinforcing steel required to accommodate equipment other than that shown on the Drawings shall be paid out of Allowance Item No. 4.

1.07 MAINTENANCE

A. Provide one set of all special tools required for normal operation and maintenance of the equipment.

B. Provide the following spare parts for the screw presses.

1. One (1) set of brushes or wipers with mounting hardware (clips).

2. One (1) bearing assembly for shaft.

3. One (1) 110V solenoid valve for spray bar washing system.

4. Ten (10) nozzles for spray bar washing system.

C. Provide one quart of finish paint for field touch-up.

D. Provide one spare PLC I/O module of each type used and one spare PLC power supply of each type used.

E. The following control panel spare parts shall be furnished loose:
   a. Timers and sockets – Two of each type installed.
   b. Relays and sockets – Two of each type installed.
   c. 24VDC power supplies – One of each type installed.
   d. Fuses and circuit breakers – 10 percent (minimum of 10 fuses and 2 circuit breakers) of each type and size installed.
   e. Light bulbs – 10 percent (minimum of 10) of each type installed. For LED type lights, 5 percent (minimum of 3) of each color installed.
   f. Selector switches/pushbuttons – Two of each type installed including contact blocks.

© 2017 CDM Smith
All Rights Reserved

g. Provide touch-up paint, of each type and color used for all painted cabinets, panels, and consoles supplied.

F. All spare parts, special tools, touch-up paint, and lubricants shall be packaged and furnished in accordance with Section 01600.

1.08 DELIVERY, STORAGE AND HANDLING

A. Deliver equipment and controls to the job site in as large of units as practical to require the minimum amount of field connection and assembly.

B. Refer to Section 01600 for additional requirements.

1.09 WARRANTY

A. The manufacturer shall warrant against any defects in material or workmanship to the screw press and framework for one year from the date of Substantial Completion.

B. Refer to Section 01740 for additional warranty requirements.

PART 2 PRODUCTS

2.01 GENERAL

A. The equipment specified herein is intended to be standard dewatering equipment of proven ability as manufactured by a reputable firm having experience in the production of such equipment. The equipment furnished shall be designed, constructed and installed in accordance with the best practices and methods and shall operate satisfactorily when installed as shown on the Drawings.

B. All parts shall be so designed and proportioned as to have liberal strength and stiffness and to be especially adapted for the work to be done. Ample room and facilities shall be provided for inspection, repairs and adjustment.

C. All necessary foundation bolts, plates, nuts and washers shall be furnished by the equipment manufacturer and shall be of Type 304 stainless steel.

D. The Post-Dewatering Room of the Solids Processing Building is unclassified per NFPA 820.

2.02 SCREW PRESS

A. Materials

1. Sludge dewatering press shall be manufactured from AISI 304L stainless steel shapes (rods, angles, and channels), pipes, and sheets. In particular, the wedge wire basket, screw, shaft, covers; support legs, fasteners and anchor bolts shall be made of this material. The structural support frame shall be made from Type 304L stainless steel or ASTM A36 carbon steel.

© 2017 CDM Smith
All Rights Reserved

2. Brushes or wipers for helical screw flights shall be of wear resistant plastic or elastomeric material. The brush or wiper shall be held in place by stainless steel clamps and bolts which can be easily removed.

3. The entire equipment shall be manufactured in a stainless steel only factory to prevent contamination of the stainless steel with rusty dust.

4. The equipment, after its fabrication, shall undergo a passivation (pickling) process to ensure maximum resistance to corrosion. All stainless steel components and structures shall be submersed in a chemical bath of nitric acid and hydrofluoric acid to remove any residues that may be present on the material as a result of forming, manufacture, or handling. After removal from the pickling bath, the equipment shall be washed with a high-pressure wash of cold water to remove any remaining surface debris and promote the formation of an oxidized passive layer which is critical to the long life of the stainless steel. Submergence insures complete coverage. Spray-on chemical treatments and glass bead blasting are specifically not acceptable due to their inability to provide complete and uniform corrosion protection.

B. Screw Press Design

1. The screw press shall be installed horizontal or inclined at 10 degrees. Dewatering of the sludge shall take place in a basket, which consists of three sections of wedge wire baskets or perforated screens. The first section shall be dedicated to thicken the sludge. The second section is for pre-dewatering and the third section is for final dewatering. For wedge wire baskets, the wedge sections of the three different baskets shall have bar spacing from 0.5 mm to 0.1 mm. The overall basket length shall be a maximum of 17 feet 8 5/8 inches (5,400 mm). The basket diameter shall be a maximum 35-1/2 inches (900 mm).

2. The screw press shall be completely enclosed to prevent odor emission. The whole dewatering section and basket area shall be easily accessible through inspection covers mounted to the the machine. Covers shall be carbon steel, stainless steel or an ABS-PMMA composite.

3. Two welded 3-inch air vents shall be provided at opposite ends of the press. Each vent shall be flanged and capped with a gasket and blind flange.

4. A screw shall be installed inside of the screen basket. The screw transports the sludge from the inlet to the discharge area at the end of the pressure zone. Its shaft diameter shall be conical towards the discharge section of the machine. The flights of the helical screw shall be provided with brushes or wipers to clean the wedge wire screen from the inside.

5. The screw shall be shafted and shall be made of stainless steel. A shaftless screw is not acceptable. A bearing shall support the inlet end or the discharge end of the screw shaft. Wear strips are not acceptable.

6. A screw drive shall be provided at the sludge feed or discharge side of the press. The motor speed shall be controlled with a VFD. The drive unit shall be directly coupled to the screw shaft through a gearbox.

7. The cleaning of the wedge wire or perforated screen from the outside shall be performed with a stationary or mobile spray bar washing system made of stainless steel piping and

© 2017 CDM Smith
All Rights Reserved

spray nozzles. Its spraying shall cover the entire area of the screen. One solenoid valve controls the flow to the spray bar washing system. If a cleaning cycle is initiated, the screw press motor reverses and rotates the basket, until it has completed a 360-degree rotation. System Supplier shall provide 2-inch water supply line to the female threaded connection. Mobile spray bar washing systems shall utilize a maximum 1/2-HP, 480V, 3-phase drive motor. Limit switches shall be provided to mark the start and end of each pass of the spray bar and to prevent overtravel of the spray bar.

8. Spray water supply shall be designed for a minimum flow of 40 GPM plant water (disinfected plant effluent) at a minimum pressure of 60 PSIG. Water pressure shall be a minimum of 70 PSIG. Average spray water consumption shall not exceed 101 gallons at 70 PSIG per wash cycle.

9. A pneumatic actuated cone that serves for adjusting the pressure in the pressure zone shall be provided at the discharge end of the screening basket.

10. Sludge cake shall be automatically discharged through a rectangular sludge discharge opening. The sludge discharge opening shall connect to the vertical chutes of the Post-Dewatering Screw Conveyor System specified in Section 14555. The System Supplier shall coordinate installation of the dewatering system with the installation of the conveyor system. The sludge conveyor shall be controlled from the main control panel of the screw press.

11. The System Supplier shall provide a minimum 6-inch diameter drain line for the filtrate and connect it to the bottom drain connection of the screw press. The drain line shall also be provided with a 1-½ inch flush connection with manual ball valve.

C. Screw Press Motor

1. Maximum motor speed: 1680 rpm.

2 Service factor: 1.0

3. Torque shall be sufficient to start and operate sludge dewatering plant without exceeding nameplate ratings for current and power.

4. Rating: 230/460V, 3-phase, 60 Hz

5. Nominal power screw drive motor: 5 HP minimum, 7.5 HP maximum

6. Motor shall conform to Section 16150.

D. Pneumatic Cone Controls & Pneumatic Panel

1. The sludge dewatering screw press shall use compressed air to provide automated backpressure to the sludge dewatering process. Pneumatic cylinders shall be connected to a cone, providing backpressure to the dewatered sludge being conveyed forward. The pressure between the auger moving sludge forward, and the cone pressing backwards, will provide pressure necessary to squeeze all water possible from the sludge.

© 2017 CDM Smith
All Rights Reserved

2. The cone pressure shall be fully automated with a pneumatic control panel. The pneumatic control panel shall be wall-mounted and shall provide all necessary electrical automation through the screw press PLC, and pneumatic automation through a solenoid valve and automated or manually adjustable pressure regulator. Air supply lines from air compressor to pneumatic panel, and from pneumatic panel to actuator cylinders shall be 3/8" OD polyurethane tubing inside 3/4" PVC carrier.

3. Air compressor shall be rated for 5.5 CFM at 110 PSI, 2.0 HP, 110 VAC.

4. Refer to Section 16191, Paragraph 2.03, for additional panel construction requirements.

E. Flocculation Tank

1. The System Supplier shall design and provide a flocculation tank to maximize the performance of the flocculation process.

2. The flocculation tank shall be made of Type 304L stainless steel and shall be sized by the System Supplier to provide a minimum retention time of 3 minutes between the polymer injection ring and the inlet of the screw press.

3. The tank shall be supplied complete with a top-mounted, vertical-shaft agitator with a variable-speed, maximum 3-HP, 460V, 3-phase motor.

4. The tank shall have the following process connections.
   a. A 4-inch feed sludge inlet with polymer injection ring (Post-Dewatering Polymer Injection Point xA as indicated on the Drawings).
   b. A 6-inch flocculated feed sludge outlet to the screw press.
   c. A 4-inch drain with a stainless steel ball valve and a quick connect coupling.

5. The tank shall be provided with a pressure sensor.

6. The System Supplier shall furnish a second, identical polymer injection ring for installation on the sludge feed piping to each screw press (Post-Dewatering Polymer Injection Point xB) as shown on the Drawings.

2.03 SURFACE PREPARATION AND SHOP PAINTING

A. All surfaces shall be prepared, shop primed and finish painted in the manufacturer's shop as part of the work under this Section.

B. All carbon steel surfaces shall be flame sprayed zinc/epoxy painted.

C. Surface preparation and shop priming shall be as specified in Section 09901. Finish painting shall be as specified in Section 09902. Furnish one quart of finish paint for field touch-up along with the spare parts, special tools and lubricants specified in Paragraph 1.07.

2.04 MAIN CONTROL PANEL

A. The manufacturer shall furnish one Main Control Panel for each screw press. The Main Control Panel shall be mounted in a wall-mounted NEMA 4X Type 316 stainless steel enclosure located as shown on the Drawings. Panel shall be UL labeled, as a complete unit,

following assembly. Panel shall include, but not be limited to, the following items. Refer to Section 16191, Paragraph 2.03, and Sections 13300 and 13330 for additional panel construction and VFD requirements.

7. PLC shall be Allen-Bradley CompactLogix. CPU module shall be 1769-L33ERM.

8. The OIT for control of the system shall be a nominal 10-inch, Allen-Bradley PanelView Plus 6 with 512MB RAM, 512MB flash card, and the latest versions of all firmware and software.

9. Enclosure shall be supplied with a main circuit breaker interlocked with the door(s).

10. Motor circuit protector and magnetic starter, except where VFDs are indicated, for each motor.

11. Variable frequency drives for the following:
    a. Screw press motor with 10:1 speed potentiometer.
    b. Flocculation tank agitator motor.

12. Surge Protective Device (SPD).

13. Phase monitor.

14. An Ethernet switch.

15. Provide the following pilot lights.
    a. Power On (white)
    b. System Running (green)
    c. Common Alarm (amber)

16. Provide the following pushbutton switches.
    a. Emergency Stop
    b. System Reset
    c. Alarm Silence

17. Provide the following selector switches.
    a. Hand-Off-Auto selector for screw press.
    b. Forward-Off-Reverse selector for screw press.
    c. Hand-Off-Auto selector for spray wash.

18. Repeat cycle timer circuit for spray water solenoid operation in hand or auto.

19. Repeat cycle timers for sludge feed pump, screw press, and polymer solution feed pump in auto.

20. Transformer sized for control circuit loads and additional 120 V circuits as specified. Transformer size shall be adequate to provide 150 percent of the control circuit requirements and 100 percent of other auxiliary 120 volt loads. Provide fused primary and secondary and bond unfused leg of secondary to enclosure.

© 2017 CDM Smith
All Rights Reserved

21. All required contacts and relays required for automatic operation of the Pneumatic Panel and the spray wash system.

22. The screw press manufacturer shall provide all wiring between the Main Control Panel and the Pneumatic Panel.

23. The OIT shall provide, at a minimum, the following controls and indicators. Color indicates required indicator color.
    a. Automatic cycle start/stop buttons.
    b. Speed indicator (0-100%) and 10:1 speed control adjustment for screw press.
    c. Speed indicator (0-100%) and 10:1 speed control adjustment for sludge feed pump.
    d. Speed indicator (0-100%) and speed control adjustment for polymer solution feed pump.
    e. Speed indicator (0-100%) and speed control adjustment for flocculation tank agitator.
    f. Non-resettable elapsed time meter for screw press. Meter shall read in tenth of hours through 99,999 hours total time.
    g. Loss of phase (amber)
    h. Thermal overload for each motor (amber)
    i. Screw press running (green)
    j. Screw press stopped (red)
    k. Screw press feed pump running (green)
    l. Screw press feed pump stopped (red)
    m. Polymer feed pump running (green)
    n. Polymer feed pump stopped (red)
    o. Alum feed pump running (green)
    p. Alum feed pump stopped (red)
    q. Flocculation tank agitator running (green)
    r. Flocculation tank agitator stopped (red)

24. Alarm circuit to activate relay with normally open contacts. Terminals shall be provided for output signal to a common alarm system. Alarm circuit shall be activated by the following alarms: thermal overload, high flocculation tank pressure, and system alarm. Provide an alarm beacon, alarm horn, and alarm silence pushbutton on the panel.

25. The panel shall be capable of receiving the following signals, at a minimum, from the plant SCADA system via Ethernet.
    a. Start command.

26. The panel shall be capable of sending the following signals, at a minimum, to the plant SCADA system via Ethernet.
    a. Run status for screw press.
    b. Alarm condition for screw press.
    c. Associated alum feed pump start/stop.
    d. Associated alum feed pump speed control.
    e. Associated alum feed pump speed feedback.

27. Provide laminated plastic name tags on the panel door for the name of the control panel and components to indicate the device function.

28. Provide a plastic laminated electric diagram with wire / terminal numbers and color codes permanently fastened to inside of enclosure door.

© 2017 CDM Smith
All Rights Reserved

2.05 CONTROL SEQUENCE

A. The screw press feed pump controls, post-dewatering polymer feed pump controls, and alum feed pump controls shall be integrated with the screw press Main Control Panel through the plant SCADA system.

B. All controls per the Process and Instrumentation Diagrams and the control descriptions specified in Section 13305 shall be incorporated into the control panels. The screw press manufacturer shall provide all remote monitoring and control signals as necessary for operation per Division 13 and as shown on the Drawings.

C. Each screw press Main Control Panel shall include the required programming, contacts and relays for the following operation.

1. Manual Control
   a. Operation shall be controlled by Hand position of the Hand-Off-Auto switch located in the control panel.
   b. Sludge dewatering screw press, feed pumps, and polymer feed system shall be started via their respective Hand (manual) position of the Hand-Off-Auto switch located in the respective equipment control panels.
   c. The operator shall be capable of manually adjusting the screw press speed, flocculation tank agitator speed, sludge feed rate, and polymer feed rate via speed pots mounted on the control panel and the fiber network.

2. Automatic Control
   a. Operation shall be controlled by the Auto position of the Hand-Off-Auto switch located in the control panel.
   b. The sludge dewatering system shall be started via the Automatic Cycle "Start" manual push button. The system start sequence shall start the dewatering screw press, sludge feed pump, flocculation tank agitator, polymer metering pump, and the alum feed pump at the proper time in the startup sequence.
   c. Sludge dewatering screw press speed shall be controlled via VFD speed pot controls in the control panel. Operator shall also be capable of manually adjusting the sludge feed rate, flocculation tank agitator speed, and the polymer feed rate via speed pots mounted on the screw press control panel.
   d. The system shall operate until manually shut off by the Automatic Cycle "Stop" pushbutton or automatically shut off in the event of a sludge feed pump off level, and/or sludge screw press, flocculation tank, sludge feed pump, or polymer feed system alarm condition.
   e. Manual initiation of a stop sequence shall cause the sludge feed pump, polymer solution feed pump, alum feed pump, flocculation tank agitator, and screw press to be stopped via 0-60 minute run down timers located in the control panel. Individual run time of each unit shall be preset by the operator. An alarm shall be indicated in the event of Low-Low Level in the Digested Biosolids Storage Tank (Tag No. TNK-7000) during the stop sequence.
   f. The sludge dewatering system shall also be stopped by activation of the emergency stop switch located on its respective control panel.

3. Each Main Control Panel shall also include all required programming, contacts and relays for the automatic operation of the Pneumatic Panel and the spray wash system.

© 2017 CDM Smith
All Rights Reserved

PART 3 EXECUTION

3.01 FACTORY TEST

A. A certified performance test shall be performed on each screw press at the factory. Manufacturer shall submit certification of test results prior to shipment.

3.02 INSTALLATION

A. Installation shall be in accordance with the Construction Sequence in Section 01014.

B. Installation shall be in strict accordance with the manufacturer's instructions and recommendations in the locations shown on the Drawings. Equipment assemblies shall be installed under supervision of a representative of the manufacturer supplying the equipment. This supervision is in addition to the services of the factory representative specified in PART 1. Installation shall include furnishing the required lubricant for initial operation. The grades of oil and grease shall be in accordance with the manufacturer's recommendations. Anchor bolts shall be set by the System Supplier in accordance with the manufacturer's recommendations.

C. Local electrical shutoffs for power supplied to field equipment shall be provided.

D. The screw press shall be assembled in the manufacturer’s shop to ensure proper fitting of parts. If some limited disassembly is required for shipment, the disassembled portions shall be match marked prior to any disassembly to minimize the potential for erection problems upon arrival at the plant. The screw press shall be installed complete with all necessary hydraulic hoses, pneumatic tubing, and piping connections. The machine shall arrive completely wired, with the wiring terminating at terminal boxes, as described in PART 2 supplied by the manufacturer. The Contractor shall wire from the Screw Press Control Panel to the terminal boxes and from the Screw Press Control Panel to the plant electrical distribution and control systems in accordance with Division 16.

E. During the installation of the screw press, the machine shall be handled using canvas or nylon slings so as not to damage any coatings. Coatings and finishes damaged during transport and installation shall be repaired in accordance with the manufacturer’s instructions before startup.

F. No equipment shall be energized unless there is written authorization from the manufacturer or unless it is done in the presence of the manufacturer’s service representative.

G. Provide touch-up of exterior paint as appropriate.

3.03 FIELD TESTS

A. Coordinate all field tests in this Section with field tests included in Section 11224, 11242, 11244, 11246, 11254, 11255, 11315, 11344, 13212, 14555, and 14630 as applicable and Section 01665. Field tests shall include all equipment included under this Section.

B. Submit field test procedures in accordance with Section 01665.

© 2017 CDM Smith
All Rights Reserved

C. Pre-Operational Checkouts: After the equipment in this Section and in Section 11224, 11242, 11244, 11246, 11254, 11255, 11315, 11344, 13212, 14555, and 14630 has been completely installed, under the direction of the manufacturer's factory representative, conduct in the presence of the Engineer such tests as are necessary to ensure that all equipment conforms to this Section.

1. Following successful completion of Pre-Operational Checkouts, submit copies of the manufacturer's field service technician's report and Form 01100-A, Manufacturer's Certification of Proper Installation (COPI), in accordance with Section 01665, Paragraph 1.03.A.4.

D. Functional Testing: Refer to Section 01665.

1. Prior to start up, the equipment shall undergo a complete visual inspection of all components in the presence of the Engineer. All defects and deficiencies noted by the Engineer shall be repaired or remedied prior to start up.

2. The Owner shall be advised of the intended date of the startup at least 2 weeks in advance; arrangements shall be made for sludge, chemicals, water, sludge cake disposal truck and any other matters essential to start up.

3. The manufacturer's approved operating and maintenance manual shall be on hand, and the pre-startup checklist shall be followed. All grease and lubricants shall be added, and all start up settings of gauges, meters, etc., shall be verified.

4. When all conditions are readied, and in the presence of the Engineer, the screw press shall be operated dry for a continuous period of not less than 4 hours, to demonstrate the ability of the equipment to operate without vibration, jamming, leakage or overheating over the full range of operating conditions, including drive speed variation. All systems controlled from the Screw Press Control Panel and under this Section all equipment furnished shall be tested and verified, and operated over the specified range of control. Detailed records of performance need not be taken.

5. After satisfactory operation has been completed, to the satisfaction of both the Engineer and the manufacturer's service representative, the service representative shall certify in writing that the equipment is installed in complete compliance with the manufacturer's specifications and the Contract Documents and that the equipment is ready for the Field Acceptance Tests.

E. Complete System Commissioning: Refer to Section 01665.

F. After installation and the specified start up procedures have been completed, the screw presses shall be tested to assure conformance with the specified performance criteria using the sludge as specified in Paragraph 1.06A.

G. The manufacturer's service representative shall be present during all testing to aid in conducting the tests as specified herein. A detailed test procedure for each test shall be prepared and delivered in writing to the Engineer in accordance with Section 01665. Included with the test procedures will be an outline of testing laboratory facility requirements of the Contractor to meet the test requirements as specified herein.

© 2017 CDM Smith
All Rights Reserved

H. The manufacturer shall provide a recommended polymer for use in testing. The manufacturer shall make his recommendation based upon the type of sludge and his knowledge and experience with the supplied equipment. Further, the manufacturer shall have conducted prior bench scale or onsite pilot testing of at least six polymers on the sludge produced at the facility to support the recommendation.

I. The following is a summary of responsibilities of the Contractor for testing of the dewatering equipment. The summary is not intended to limit the scope of work as specified herein.

1. Prepare detailed test procedures for all phases of test work.

2. Provide test personnel and qualified technicians during all phases of the work.

3. Prepare a written report for each phase of test work covering results, problems encountered and remedial action required, if any. Report shall be submitted for review by the Engineer within 1 week after completion of testing.

4. During the operational testing, provide all equipment, material, temporary power, chemicals, heat, operating and support personnel, and all other incidentals required to take samples and perform the tests specified herein that can reasonably be provided by the Contractor. The Contractor shall have completed the sludge recirculation system and plant reuse water system modifications prior to the start of testing. Refer to Section 01014.

5. During the final acceptance testing, all sludge, water, chemicals, power, and operating personnel required will be provided by the Owner. Contractor shall provide all necessary technical personnel, including laboratory personnel, to oversee the testing and to provide technical assistance to the Owner's personnel in operating the dewatering equipment. The Contractor shall be responsible for collecting all required samples and measurements.

J. All tests shall be conducted at no additional cost to the Owner.

K. All tests shall be witnessed by the Engineer.

L. Final performance tests will be subject to the conditions of the Contract Documents.

M. Acceptance Test

1. After completion of the startup demonstration and after the entire treatment plant is fully operational and a sufficient quantity of digested sludge is available, each screw press shall be subjected to testing to determine compliance with the specified performance criteria.

2. Each unit shall be fed the sludge specified in Paragraph 1.06 and polymer in a proportion and solids concentration as specified and shall be operated until the unit reaches steady state optimum performance. The unit shall then begin a five-day, eight-hour-per-day test period during which the average performance of the unit must equal or exceed the specified performance parameters. If the unit fails to equal or exceed that required, or cannot operate continuously for the five-day period due to equipment failure, that day's test period shall be repeated. The Contractor shall be given 30 calendar days to optimize performance to produce results to equal or exceed the specified performance criteria.

3. During each day's performance test, the Contractor shall be responsible for collecting all required samples and measurements at one-hour intervals in order to make the following determinations. The Owner may elect to take split samples. The first set of samples and measurements shall be taken one hour after the beginning of the test run.
    1) Sludge feed – percent total solids.
    2) Sludge feed – percent volatile solids.
    3) Sludge feed rate – gpm.
    4) Screw press sludge feed pump speed setting.
    5) Polymer solution feed rate – gpm.
    6) Polymer solution concentration.
    7) Polymer solution feed pump speed setting.
    8) Filtrate and washwater – total solids.
    9) Filtrate and washwater – suspended solids.
    10) Final cake discharged – total solids.
    11) Plant water (one or two daily composites) – total solids.
    12) Feed to screw press (sludge + polymer + dilution water) – total solids.
    13) Filtrate and washwater flow rates – gpm.
    14) Cake discharge rate – lbs/hr based on weigh scale measurements.
    15) Solids capture – percent.
    16) Setting for screw drive speed.
    17) Setting for sludge conditioner drive speed (if supplied).
    18) Any other data required to calculate the actual performance of the sludge dewatering system.

4. During the entire Acceptance Test period, all solids determinations shall be made by an independent laboratory suitable to the Engineer. All testing shall be performed at no additional cost to the Owner.

5. The tests shall be performed in accordance with the procedures outlined in Standard Methods, latest edition, as follows:
    1) Dry Solids – In accordance with "Residue on Evaporation."
    2) Suspended Solids – In accordance with "Total Suspended Matter."

6. All data collected during performance testing shall be made available by the Contractor for analysis by the Engineer for determining compliance with this Section.

7. For the dewatering process including the screw press and ancillary equipment to qualify for acceptance, the average values of the test conducted during the test period shall meet or exceed the performance criteria specified herein, and no data shall deviate more than 40 percent from the specified criteria.

© 2017 CDM Smith
All Rights Reserved

8. Test data that are in apparent error, in the opinion of the Engineer, shall be discarded. Should it become necessary to discard more than one third of the data, the Engineer may declare the test invalid.

9. If the performance criteria are not met in the opinion of the Engineer, during the test, the Contractor will be permitted up to one additional test period. Scheduling of the tests shall be subject to the approval of the Engineer. The Contractor shall be permitted to modify their equipment and/or the operation, completely at their own expense, and the tests repeated, as described above.

10. If after the completion of the additional test period, the equipment, in the opinion of the Engineer, does not meet the performance requirements, the Engineer retains the option to require the Contractor to test and evaluate, under the supervision of the Engineer, a trailer mounted screw press of similar design and capacity of another manufacturer chosen by the Engineer. Should tests using the trailer mounted press indicate that the sludge will dewater in accordance with the performance criteria specified herein, replace the installed screw press and all appurtenances with full scale equipment made by the trailer mounted press manufacturer at the Contractor's expense. A full-scale performance test shall be conducted to demonstrate compliance with specified performance criteria.

END OF SECTION

© 2017 CDM Smith
All Rights Reserved

SECTION 15066
MILL GRADE STAINLESS STEEL PIPE, FITTINGS AND SPECIALS

PART 1 GENERAL

1.01 SCOPE OF WORK

A. The work specified herein shall include Contractor furnished and installed commodity and non-commodity mill grade stainless steel pipe, fittings and specials for use on above ground piping systems shown on the Drawings. The Contractor shall furnish all labor, materials, equipment, and incidentals required to manufacture, shop test, deliver, install, disinfect (where required) and field test mill grade stainless steel pipe, fittings, specials and appurtenances as specified herein.

B. The Contractor shall be advised to read the detailed fabrication and installation requirements included in Part 3 of this Section. These requirements shall apply to the Contractor and Supplier and will be strictly enforced by the Engineer during execution of the Work.

C. The Contractor shall use the dimensions included in the Shop Drawings of the actual Work to be furnished by the Supplier in every case. The Work shown on the Drawings is intended to be approximately correct to scale. The size of piping, valves, and equipment are shown, but it is not the intent to show every offset or fitting, nor every hanger, support, or structural difficulty that may be encountered.

D. The Contractor shall carry out the Work necessary to meet the intent and purpose of the system shown on the Drawings. All parts necessary to deliver a complete working system, ready for use at start-up, shall be furnished and installed by the Contractor without an increase in Contract Price or change in Contract Times from the Effective Date of the Agreement. The Contractor shall be responsible to coordinate the system installation and routing with the Work of all trades.

1.02 SUBMITTALS

A. Submit, in accordance with Section 01300, copies of all materials required to establish compliance with this Section. Submittals shall include at least the following:

1. Supplier cut-sheets, operation and maintenance data, test reports, etc., with text written in English, and all numerical data in the foot-pound-second system of units.

2. All data and information required for the complete piping system shown on the Drawings. All dimensions shall be based on the actual equipment to be furnished. Shop Drawings shall include schedules, dimensioning of straight pipe segments, fittings and Specials. Shop Drawings shall include details of joints, instrumentation taps, and other piping accessories.

3. A project-specific Quality Assurance Plan (QAP), prepared by the Supplier, including the following minimum information:
   a. An outline of Contractor and Supplier certified shop testing reports including shop testing procedures, shop testing results, and a comparison of the shop testing results to the requirements of the referenced standards and this Section.
   b. An outline of Contractor and Supplier certified non-destructive inspection reports in accordance with the codes and standards referenced herein.

© 2017 CDM Smith
All Rights Reserved

c. An outline of Contractor and Supplier physical and chemical testing reports to show that materials provided to meet the minimum requirements stated herein (e.g. ASTM, etc.). Materials testing reports shall outline the grade and number of tests, testing results, and comparison of the test results to the standard (e.g. ASTM, etc.) requirements.

4. Project specific forms, equipment data sheets and material data sheets for manual field and factory welding; and, semi-automated and fully-automated field and factory welding processes to be utilized by the Contractor and Supplier, in accordance with Section IX of the ASME Boiler and Pressure Vessel Code (ASME BPVC). Submittals shall include the following:
   a. Welding Procedure Specifications (WPS) for each proposed field and shop welding procedure or process, including those procedures or processes used for shop and field welding of piping and supports.
   b. Procedure Qualification Record (PQR) for each WPS shall be submitted.
   c. Welders' and welding operators' certification records for each proposed WPS and each welder assigned to the work in the shop and field. Welders and welding operators shall be qualified for making welds in position 6G for each welding process to be used.
   d. Preheat and post-weld heat treatment processes and equipment.
   e. Post-weld cleaning and de-scaling procedures for pipe joints and fabrications.

5. Procedures, equipment data sheets and related information for groove cutting machinery and equipment to be used at the factory and at the Site for the preparation of pipe ends used with grooved-joint couplings, fittings and valves.

6. Procedures, equipment data sheets and related information for press-fit joint equipment to be used at the factory and at the Site for the preparation of fittings and valves.

7. Procedures, equipment data sheets and related information for thread cutting machinery and equipment to be used at the factory and at the Site for the preparation of pipe ends used with threaded joint fittings, valves and equipment.

8. Contractor's bolting calculations including clamping forces and target bolting torque values for assembly of flanged joints in each piping system. Bolting calculations shall be signed and sealed by a professional engineer, in accordance with the Laws and Regulations having jurisdiction at the Site. Calculations shall be submitted with cut-sheets and product data for bolts, stud-bolts, nuts, washers, gaskets, thread lubricants and technical bolting equipment to be used at the Site by the Contractor for joint assembly. The original Shop Drawings shall include calibration records and procedures for technical bolting equipment to be used prior to execution of the Work, and interim submittals of recorded recalibration of equipment during execution of the Work.

9. Technical data sheets for factory applied protective coatings including, material safety data sheets, instructions for repair of coatings at the Site, and certification of compliance with the performance standards specified herein and in the referenced sections. The Shop Drawings shall include joint details including cut-backs and proposed methods of coating and lining repair at the site following assembly of welded joints, where applicable.

10. A statement of compliance for the Work manufactured and tested in accordance with the referenced standards specified herein.

© 2017 CDM Smith
All Rights Reserved

11. Certified non-destructive testing results and weld inspection reports performed by the Supplier in accordance with the applicable codes specified herein. The submittal shall include NDE testing results for procedures performed at the factory by the Supplier, which shall be submitted prior to the shipping of the pipe, fittings and specials.

12. Results of required physical and chemical testing to show that materials provided meet the minimum requirements stated herein (e.g. ASTM, etc.). Materials testing reports shall outline the type and number of tests, testing results, and comparison of the test results to the requirements of the referenced standards specified herein.

13. Shop Drawings, including those prepared by the Supplier, shall include a Contactor's transmittal sheet having data and text entered identifying the contents of each submittal, providing the Owner and Engineer including a general brief narrative of the scope of each Shop Drawing associated with the Work specified herein.

14. Corrections, comments or lack thereof, made relative to Shop Drawings during review by the Engineer and/or Owner shall not relieve the Contractor and Supplier from compliance with the requirements of the Contract. The Contractor shall be responsible for the final piping system conforming and correlating to the Drawings and requirements specified herein. Selection of fabrication processes, techniques of construction, coordinating the Work with all trades, and performing the Work in a safe and satisfactory manner shall be the responsibility of the Contractor and Supplier.

1.03 REFERENCED SECTIONS

A. Pipe testing, cleaning and disinfection is included in Section 01445.

B. Delivery, Storage and Handling is included in Section 01600.

C. Modifications to Existing Structures, Piping and Equipment are included in Section 01046.

D. Fabrication, Surface Treatments and Protection of Stainless Steel is included in Section 05040.

E. Painting is included in Division 09.

F. General Piping Requirements are included in Section 15051.

G. Stainless steel pipe welding, as related to the Work specified herein, are included in Section 15067.

H. Valves and Appurtenances are included in Section 15100.

I. Piping Specialties are included in Section 15120.

J. Pipe Hangers and Supports are included in Section 15140.

K. Thermal Insulation is included in Section 15250.

L. Electrical Heat Tracing is included in Section 15257.

© 2017 CDM Smith
All Rights Reserved

1.04 REFERENCED STANDARDS

A. American Society of Mechanical Engineers (ASME)

1. ASME B1.1 – Unified Inch Screw Threads (UN and UNR form)
2. ASME B1.10.1 – Pipe Threads, General Purpose (Inch)
3. ASME B16.5 – Pipe Flanges and Flanged Fittings
4. ASME B16.9 – Factor-Made Wrought Buttwelding Fittings
5. ASME B16.10M – Welded and Seamless Wrought Steel Pipe
6. ASME B16.11 – Forged Fittings, Socket-Welding and Threaded
7. ASME B16.47 – Large Diameter Steel Flanges NPS 26 through NPS 60
8. ASME B18.2.1 – Square and Hex Bolts and Screws: Inch Series
9. ASME B18.2.2 – Square and Hex Nuts
10. ASME B31.3 – Process Piping.
11. ASME B36.10M – Welded and Seamless Wrought Steel Pipe
12. ASME B46.1 – Surface Texture (Surface Roughness, Waviness, and Lay)
13. ASME Boiler and Pressure Vessel Code Section V – Nondestructive Examination
14. ASME Boiler and Pressure Vessel Code Section IX – Welding and Brazing Qualifications

B. American Society for Testing and Materials (ASTM)

1. ASTM A182 – Standard Specification for Forged or Rolled Alloy and Stainless Steel Pipe Flanges, Forged Fittings, and Valves and Parts for High-Temperature Service
2. ASTM A240 – Standard Specification for Chromium and Chromium-Nickel Stainless Steel Plate, Sheet, and Strip for Pressure Vessels and for General Applications
3. ASTM A312 – Standard Specification for Seamless, Welded, and Heavily Cold Worked Austenitic Stainless Steel Pipes
4. ASTM A351 – Standard Specification for Castings, Austenitic, for Pressure-Containing Parts.
5. ASTM A366 - Standard Specification for Factory Made Wrought Nickel and Nickel Alloy Fittings
6. ASTM A403 – Standard Specification for Wrought Austenitic Stainless Steel Piping Fittings

7. ASTM A743 – Standard Specification for Castings, Iron-Chromium, Iron-Chromium Nickel, Corrosion Resistant, for General Application

8. ASTM A744 – Standard Specification for Castings, Iron-Chromium-Nickel, Corrosion Resistant, for Severe Service

9. ASTM A790 – Standard Specification for Seamless and Welded Ferritic/Austenitic Stainless Steel Pipe

10. ASTM A815 – Standard Specification for Wrought Ferritic, Ferritic/Autenitic, and Martensitic Stainless Steel Piping Fittings

11. ASTM A1032 – Standard Test Method for Radiographic Examination of Welds

12. ASTM B462 – Standard Specification for Forged or Rolled UNS N06030, UNS N06022, UNS N06200, UNS N08020, UNS N08024, UNS N08026, UNS N08367, UNS N10276, UNS N10665, UNS N10675 & UNS R20033 Alloy Pipe Flanges, Forged Fittings & Valves & Parts for Corrosive

13. ASTM B464 – Standard Specification for Welded UNS N08020 Alloy Pipe

14. ASTM B675 – Standard Specification for UNS N08367 Welded Pipe

15. ASTM B690 – Standard Specification for Iron-Nickel-Chromium-Molybdenum Alloys (UNS N08366 and UNS N08367) Seamless Pipe and Tube

16. ASTM B729 – Standard Specification for Seamless UNS N08020, UNS N08026, UNS N08024 Nickel-Alloy Pipe and Tube

17. ASTM E94 – Standard Guide for Radiographic Examination

C. American Water Works Association (AWWA)

1. AWWA Manual M11 – Steel Water Pipe: A Guide for Design and Installation

D. Manufacturer's Standardization Society (MSS)

1. MSS SP-43 – Wrought and Fabricated Butt-Welding Fittings for Low Pressure, Corrosion Resistant Applications

2. MSS SP-79 – Socket Welding Reducer Inserts

3. MSS SP-83 – Class 3000 Steel Pipe Unions Socket Welding and Threaded

4. MSS SP-97 – Integrally Reinforced Forged Branch Outlet Fittings – Socket Welded, Threaded, and Buttwelding Ends

5. MSS SP-114 – Corrosion Resistant Pipe Fittings Threaded and Socket Welding Class 150 and 1000.

© 2017 CDM Smith
All Rights Reserved

E. Compressed Gas Association (CGA)

1. CGA G-4.4 – Oxygen Pipeline Systems

F. NSF International (NSF)

1. NSF Standard 61 Drinking Water System Components

G. National Fluid Power Association (NFPA)

1. NFPA B93.19M – Particulate Contamination Analysis – Extraction of Fluid Samples from Lines of an Operating System

H. Society of Automotive Engineers (SAE)

1. SAE ARP598 – Aerospace Microscopic Sizing and Counting of Particulate Contamination for Fluid Power Systems

2. SAE J514 – Hydraulic Tube Fittings

3. SAE J518 – Hydraulic Fanged Tube, Pipe and Hose Connections, Four Bolt Split-Flange Type

4. SAE J1165 – Reporting Cleanliness of Hydraulic Fluids

I. Where reference is made to one of the above standards, the revision in effect at the time of bid opening shall apply.

PART 2 PRODUCTS

2.01 SURFACE TREATMENTS FOR STAINLESS STEEL PIPE, TUBE, AND FITTINGS

A. Stainless steel pipe specified below shall receive mill-applied surface treatments at the rolling and pipe mills prior to delivery to the site. The mill finish, and cleaning and descaling requirements shall be used as defined below to achieve the following surface roughness waviness and lay in accordance with ASME B46.1, following the procedures described below.

1. No. 1D – This surface treatment process creates a rough finish (150 to 200 µinches Ra) free of scale by hot-rolling, heat treating, and skin pickling. Pickling shall be by immersion in a 125˚F bath of 10% nitric acid and 3% hydrofluoric acid solution for a minimum of 15 minutes. Occasional grinding marks appearing on the surface of this finish shall be acceptable. This process shall be followed by a neutralizing rinse for passivation of the surface. Equivalent processes proposed for materials furnished under this specification shall be submitted for approval of the Engineer.

2. No. 2E – This surface treatment process creates a rough and dull finish (80 to 200 µinches Ra) free of scale by cold rolling, heat treating and mechanically descaling.

3. No. 2D – This surface treatment process creates a smooth finish (63 µinches Ra or better) by cold-rolling, annealing, and skin passivating the pipe and fittings after fabrication. Pipe and fittings shall be immersed in a 125˚F bath of 10% nitric acid and 3% hydrofluoric acid

© 2017 CDM Smith
All Rights Reserved

solution for a minimum of 15 minutes. This process shall be followed by a neutralizing rinse to passivate the surface. Equivalent processes proposed for pipe, tube, and fittings Pipe, having a wall thickness greater in 0.25, shall have a No. 1 mill finish.

2.02 MILL GRADE WELDED STAINLESS STEEL ALLOY PIPE

A. Mill grade welded stainless steel alloy pipe, ¼ inch to 48 inch diameter, manufactured to ASME B36.10, shall be installed where scheduled and shown on the Drawings. Pipe and tube specified herein shall be furnished in the alloy groups listed below as shown on the Drawings.

B. Welded pipe, having a wall thickness of 0.010 inch or less, shall have a No. 2D mill finish. Welded pipe, having a wall thickness 0.010 inch to 0.25 inch, shall have a No. 2E mill finish when delivered to the mill. Welded pipe, having a wall thickness greater than 0.25 inch, shall have a No. 1 mill finish.

C. Pipe shall be cold drawn and manufactured from the following alloys (P-Numbers for base metal classification in the ASME BPVC Section IX are included in parenthesis):

1. ASTM A778 (A778), Grade TP304L (304L) (ASME P-8) extra-low carbon austenitic stainless steel, low-pressure, light-wall pipe including Schedule 5S, 10S and gauge pipe.

2. ASTM A778 (A778), Grade TP316L (316L) (ASME P-8) extra-low carbon austenitic stainless steel, low-pressure, light-wall pipe including Schedule 5S, 10S and gauge pipe.

D. The following process piping shall be Type 316L stainless steel, with schedules/gauges as listed below.

Service	**Schedule/Gauge**
Sludge and Sludge Cake	5S
Fats, Oils and Grease (FOG)	5S
Digester Gas	5S
Hot Water	5S
Plant Water	5S
Foul Air and Vent	5S
Overflow	5S
Condensate	5S
Low-Pressure Compressed Air	10-in and less: 16 Gauge (0.064-in) 12-in: 14 Gauge (0.079-in) 14-in: 12 Gauge (0.109-in) 16-in: 12 Gauge (0.109-in) 18-in: 11 Gauge (0.124-in) 24-in and greater: 10 Gauge (0.138-in)

E. Welded stainless steel alloy pipe shall be manufactured by:

1. Outokumpu Piping Products, Wildwood, Florida.

2. Sandvik Tube and Wire Division, Scranton, Pennsylvania.

© 2017 CDM Smith
All Rights Reserved

3. Alaskan Copper Works, Seattle, Washington.

4. Felker Brothers, Marshfield, Wisconsin.

5. Douglass Brothers, Portland, Maine.

6. Swepco Tube, Clifton, New Jersey.

2.03 ELASTOMER MATERIALS FOR PIPING SYSTEM O-RINGS AND SEALS

A. Scheduled elastomers shall be used for ASME and SAE O-ring flanges; SAE straight thread O-ring sealed threaded joints; grooved joint couplings; and low pressure and high-pressure unions.

B. Elastomers shall be constructed of the following materials.

1. Fluoroelastomer (FKM) gaskets shall be used for low pressure compressed air at a working temperature of 20˚F to 300˚F; 65 to 95 durometer hardness shore A, smooth finish, up to 200˚F, ASTM D2000, Type H, Class K. This elastomer shall not be used for hot water service. This elastomer shall be NSF 61 certified for potable water service.

2. Nitrile (NBR) gaskets shall be used for fats, oils and grease (FOG) and hot water service.

3. Styrene butadiene rubber (SBR) gaskets shall be used for potable water, protected water, sanitary sewage, and sludge services. This elastomer shall not be used for hot water service.

4. Ethylene propylene diene monomer (EPDM) rubber shall be used for digester gas service.

5. Chlorosulfonated polyethylene synthetic rubber (CSM, aka Hypalon) shall be used for foul air and vent service.

2.04 LOW-PRESSURE LIGHT-WALL STAINLESS STEEL FITTINGS

A. Low-pressure light-wall stainless steel fittings, 2 inch to 48 inch diameter, shall only be used with ASTM A778 light-wall extra-low-carbon stainless steel pipe, and shall be designed and manufactured in accordance with ASTM A774. Fitting dimensions shall be in accordance with MSS SP-43.

B. Fittings shall be manufactured from the following alloys in accordance with the designated ASTM standard:

1. ASTM A774, Grade TP304L (extra low carbon (<0.03%) alloy for welded fabrication) austenitic for pipes manufactured from ASTM A778 Type 304L extra-low carbon light-wall austenitic stainless steel.

2. ASTM A774, Grade TP316L (extra low carbon (<0.03%) alloy for welded fabrication) for pipes manufactured from ASTM A778 Type 316L extra-low carbon light-wall austenitic stainless steel.

© 2017 CDM Smith
All Rights Reserved

C. Low-pressure light-wall fittings for stainless steel pipe shall be manufactured and/or distributed by:

1. Felker Brothers, Marshfield, Wisconsin.

2. Douglass Brothers, Portland, Maine.

3. Swepco Tube, Clifton, New Jersey.

D. Fittings for low pressure light wall piping shall match the wall thickness of the same diameter of the welded stainless steel alloy pipe specified in Paragraph 2.02.

2.05 LOW-PRESSURE LIGHT-WALL FLANGE ASSEMBLIES

A. Flanged joints used on low-pressure light wall pipe manufactured to ASTM A778, shall include stub-end fittings butt-welded to the pipe end, a back-up (follower) flange ring for bolting. The stub-end shall be constructed and have the same surface finish of the connecting pipe. Face rings shall be joined to the pipe by an interior full fillet weld.

B. Back-up flange rings shall be constructed of hot-dip galvanized ASTM A546, Grade 65-45-12 cast ductile iron. Gaskets, bolts and nuts used for assembly shall be as specified below. Flanges shall have ASME B16.1 or ASME B16.42 drilling.

C. Van Stone flange gaskets shall be cut from the non-insulating and insulating gasket materials in accordance with the application guidelines specified herein. Flanges bolts and nuts for these joints shall be as specified herein.

D. Van Stone flanges for stainless steel pipe shall be manufactured and/or distributed by:

1. Felker Brothers, Marshfield, Wisconsin.

2. Douglass Brothers, Portland, Maine.

3. Swepco Tube, Clifton, New Jersey.

2.06 COMPOSITE INSULATING FLANGE GASKETS

A. Fiberglass reinforced dielectric insulating flange gaskets shall be installed where shown on the Drawings, where dissimilar metallic flanges having differing polarity ratings on the galvanic series are mated; pipe flanges applicable to this section include ductile iron, cast iron, cast copper alloy, stainless steel alloys, 90-10 copper-nickel alloy, or nickel alloy (Monel, Hastelloy, etc.); where metallic process pipe flanges mate with valve connecting flanges and other equipment of dissimilar metallic construction; where exposed piping makes a vertical transitions to buried piping; and where otherwise shown on the Drawings.

B. Insulating flange gaskets shall be furnished as a kit including the dielectric gasket, bolt sleeves, and washers in accordance to the nominal flange size.

C. Each dielectric insulating gasket shall be a full faced isolating and sealing gasket, Type “E”, 1/8” thick, epoxy-glass retainer with bolt holes cut to match ASME B16.1 drilling. The retainer shall contain a precision tapered groove to accommodate the controlled compression of a FKM

© 2017 CDM Smith
All Rights Reserved

(Viton®) sealing element. The quad-ring seal shall be pressure energized. The epoxy-glass retainer shall have 550-volts/mil dielectric strength and a minimum 50,000-psi compressive strength.

D. Insulating bolt sleeves shall be manufactured of Mylar having a dielectric strength of not less than 4000-volts/mil.

E. Insulating washers shall be manufactured of G-10 epoxy-glass having a dielectric strength of 400 to 500-volts/mil. Insulating washers shall be installed with metallic backing washers to prevent damage to the epoxy-glass washer during bolting. The metallic washers shall be constructed of the same material as the bolts.

F. The Contractor may use molded sleeve washers as an alternate to separate washers and sleeves, as long as the material of construction has equivalent properties to those above.

G. Dielectric insulating flange gasket kits shall be:

1. Linebacker manufactured by Pipeline Seal and Insulator, Houston, Texas.

2. Trojan Quad Seal manufactured by Advance Products and Systems, Lafayette, Louisiana.

3. Jock O-ring gaskets manufactured by Central Plastics Shawnee, Oklahoma.

2.07 STAINLESS STEEL FLANGE BOLTS, STUD-BOLTS, NUTS AND WASHERS

A. The length of each flange bolt shall be selected by the Contractor. Each bolt shall have sufficient length to permit three full threads, as a minimum, protrude from the hex nut and washers after assembly. Flange bolts for dielectric insulating flange kits shall be fully-threaded along their length. The Contractor is cautioned that flange bolts having smooth shank segments along their length will not fit in Mylar sleeves or molded sleeve-washers.

B. Flange bolts shall have ASME B1.1, coarse threads, Class 2A fit, and manufactured of ASTM A193, Grade B8M stainless steel. Bolts shall conform to ASME B18.2.1.

C. Flange nuts shall have ASME B1.1, coarse threads, Class 2A fit, and manufactured of ASTM A194, Grade 8M stainless steel, having square or hex heavy dimensions in accordance with ASME B18.2.2.

1. Atlantic Bolt, Inc., Charlotte, North Carolina

2. Portland Bolt and Manufacturing, Portland, Oregon

3. Lamons Gasket Company Inc., Houston, Texas

4. Texas Bolt, Houston, Texas

5. Fluid Sealing Products, Houston, Texas

2.08 ANTI-SEIZE THREAD LUBRICANT FOR STAINLESS STEEL FLANGE BOLTS

© 2017 CDM Smith
All Rights Reserved

A. Flange bolts shall be installed using a nickel anti-seize lubricant capable of achieving the required bolt torque and sealing stress, and permitting future disassembly with minimal manual input.

B. Excess anti-seize compound shall be removed by degreasing solvent prior to finish painting the piping.

C. Anti-seize compound shall be:

1. Never-Seez Pure Nickel Special Lubricant manufactured by Bostik, Wauwatosa, Wisconsin.

2. Loctite Heavy Duty Anti-Seize Lubricant Manufactured by Henkel Technologies, Rocky Hill, Connecticut.

3. Chesterton 772 Premium Nickel Anti-Seize Compound manufactured by Chesterton Technical Products, Stoneham, Massachusetts.

2.09 STAINLESS STEEL BOLTED SLEEVE COUPLINGS

A. Bolted sleeve couplings for pipe shall be installed where shown on the Drawings, and at locations where a disassembly gap is necessary to complete a piping assembly. Bolted sleeve couplings are not restrained and require tie-rod and lug type restraints as specified below where necessary.

B. Sleeve couplings shall be constructed in accordance with AWWA C111, and have middle and end-rings fabricated of ASTM A240, Type 316 stainless steel or equivalent. The coupling shall have track-head bolts and hex heavy nuts constructed of ASTM A193, Grade B8M (Type 316) and ASTM A194, Grade 8M (Type 316) stainless steel, respectively.

C. The sleeve coupling gasket shall be constructed of Fluoroelastomer (FKM, Viton®).

D. Bolted sleeve couplings for stainless steel pipe shall be:

1. Style 38, in Type 316 stainless steel manufactured by Dresser Industries, Bradford, Pennsylvania.

2. Or equal.

2.10 TIE-ROD RESTRAINT ASSEMBLIES FOR BOLTED SLEEVE COUPLINGS

A. Tie-rod restraints for bolted sleeve couplings for stainless steel pipe shall be installed as shown on the Drawings. Tie-rod restraint assemblies shall consist of ASTM A240 Type 316 stainless steel lugs, ASTM A193, Grade B8M (Type 316) stainless steel tie-rods, ASTM A194, Grade 8M (Type 316) stainless steel hex heavy nuts and washers.

B. The tie-rod lugs shall be fabricated of the same material as the pipe to the dimensions shown on the Drawings.

2.11 ALL-METAL STAINLESS STEEL EXPANSION JOINTS

© 2017 CDM Smith
All Rights Reserved

A. Expansion joints for stainless steel pipe shall be of the low corrugation, non-controlled, two ply bellows type. Stainless steel bellows with ASME B16.5/B16.47 Class 150 or 300 welded slip on or lap joint flanges, grooved, or weld ends. Flange drilling shall meet ASME B16.5 and B16.47, raised-faced and butt-weld end dimensions shall be in accordance with ASME B16.25. Expansion joints air low pressure compressed air service shall be rated for maximum working pressure of 25 psi and maximum operating temperature of 300 degrees F. Expansion joints shall be of the single or dual end type and may be provided with liners, covers, control rods, limit stops, and/or intermediate anchor base as required.

B. Metal expansion joints for stainless steel pipe shall be constructed of one of the materials specified below to match that of the adjoining piping system:

1. ASTM A240, Grade 304L (UNS S30403), (ASME P-8) (L – low alloy for welded fabrication) Austenitic for pipes manufactured from ASTM A312 Type 304/304L or ASTM A778 Type 304ELC.

2. ASTM A240, Grade 316L (UNS S31603) (ASME P-8) (L – low alloy for welded fabrication) Austenitic for pipes manufactured from ASTM A312 Type 316/316L or ASTM A778 Type 316ELC.

3. ASTM A240, Grade 2205 (UNS S32205) (Type 2205) (ASME P-10H) Duplex for pipes manufactured from ASTM A790 Grade S32205 (Type 2205).

4. ASTM A240, Grade S31254 (6-Moly) (ASME P-8) Super Austenitic for pipes manufactured from ASTM A312 Grade S31254.
5. ASTM A240, Grade N08367 for AL6XN (6-Moly) (ASME P-45) Super Austenitic for pipes manufactured from ASTM B690/B675 Grade N08367.

6. ASTM A240, Grade N08020, Alloy 20 (ASME P-45) Austenitic for pipes manufactured from ASTM B729/B464 UNS N08020.

C. Metal expansion joints for mill grade stainless steel pipe shall be manufactured and/or distributed by:

1. U. S. Bellows, Houston, Texas.

2. Oakridge Bellows, New Braunfels, Texas.

3. Flexicraft Industries, Chicago, Illinois.

4. The Metraflex Company, Chicago, Illinois.

5. Unaflex, Pompano Beach, Florida.

PART 3 EXECUTION

3.01 QUALITY CONTROL AND QUALITY ASSURANCE

A. The Supplier shall have factories, including mills, foundries, fabrication shops and machine shops, which hold a current ISO 9001 Certificate of Quality System Registration. The Contractor shall furnish all documentation necessary to verify the Supplier’s certification and

registration.

B. The Contractor shall furnish Work in new and unused condition. The Work shall include products and services from Suppliers having a successful record of manufacturing and servicing the Work specified herein for a minimum of 10 years prior to the Effective Date of the Agreement.

C. The Contractor and Supplier shall perform and document all quality control (QC) and quality assurance (QA) procedures performed during manufacturing at the factory; during loading of the Work for transport at the factory; during transport to the Site; during unloading and storage of the Work at the Site; and during installation and startup at the Site, all part of the Work specified herein.

D. The Contractor shall be responsible for coordinating QC and QA testing of Work to be witnessed by the Owner, and Engineer in the factory, such that they may be conducted on consecutive days and completed during a single trip. The Contractor shall notify the Engineer of scheduled factory QC and QA testing and inspections three (3) weeks, as a minimum, prior to the first scheduled testing date.

E. The Owner and Engineer) will perform independent testing of the Work, herein referred to as "QA verification", at any time during manufacturing at the factory; during loading for transport at the factory; during transport to the Site; during unloading and storage at the Site; and during installation and startup at the Site. The Owner shall retain the services of an industry specialist and the Engineer to perform all QA verification procedures. The Contractor and Supplier shall allow unhindered access to the Owner and Engineer including access for still and video photography of the Work.

F. The Owner shall retain the services of an industry specialist and the Engineer to perform all QA verification procedures. QA Verification will include chemical analysis, examination, and testing as specified, following QA and QC procedures performed by the Supplier and Contractor. The Contractor shall allow unhindered access to the Engineer and including access for progress photographs and video documentation of the work. The Contractor shall remove and replace, at no increase in Contract Price or Contract Time, all defective Work, verified in non-compliance with acceptance criteria specified herein.

G. Where Defective Work is identified and rejected, based on the QA verification, all additional QA verification analyses, inspections and testing performed by the Owner or Engineer on corrected Work shall be paid for by the Contractor. The Contractor shall provide airfare (direct flights), hotel, taxi and current per diem rates for the location of inspection within the U.S.A. by GSA region, and all incidental travel expenses for the Owner and Engineer. Seats on flights over 10 hours shall be in the business class cabin.

H. In addition, reimbursement for subsequent QA verification inspections shall include all repeat QA verification analyses, testing and/or inspection related costs, including costs associated with the personnel travel expenses described above; laboratory analysis; and repeat testing or inspection report review and analysis by the Owner and Engineer.

I. All products shall be designed, manufactured, delivered and installed in accordance with the requirements of specified herein. Products specified herein shall be new and unused products of Suppliers having a successful record of manufacturing and servicing the products specified herein for a minimum of 10 years.

© 2017 CDM Smith
All Rights Reserved

J. The Contractor shall submit to the Engineer, four copies of all certified mill test reports (MTRs) for chemical analysis, mechanical properties including tensile, impact, and bend test results for all materials used in the manufacture of products specified herein. MTRs shall identify the products, for which the material will be used, and information necessary to verify compliance with the requirements specified herein.

K. If there are difficulties in operation of the systems included under this Contract due to defective Work, additional services performed by the Contractor and/or Supplier, to correct the defective Work and meet the acceptance testing requirements, shall be provided at no change in Contract Price or Contract Time.

L. Inspection by the Owner or Engineer or failure to inspect shall not relieve the Contractor of his responsibility to provide materials and perform the Work in accordance with the Contract Documents.

3.02 HYDROSTATIC TESTING OF PIPE AT THE FACTORY

A. The Supplier shall hydrostatically test each length of mill grade seamless and welded stainless steel pipe at the factory. Testing shall be in accordance with Section 01445.

B. Defective Work shall be rejected and replaced by the Contractor and Supplier at no change in Contract Price or Contract Time.

C. The Contractor shall submit hydrostatic testing documentations by as a certified MTR that describes the testing procedure, equipment, measured values, and pass/fail status of the test results.

3.03 DELIVERY, STORAGE, AND HANDLING

A. The Supplier shall use care during loading of pipe, fittings and specials prior to transporting products to the Site. The Contractor shall use care, when unloading products delivered to the Site, to prevent injury to the surface treatments and protective coatings applied at the factory. Under no circumstances shall the pipe, fittings and specials be dropped or skidded against each other. Slings, hooks, and pipe tongs used for unloading and handling at the Site shall be padded.

B. The Contractor shall be kept safe from damage the interior of all pipe, fittings and specials, and the interiors shall be kept free from dirt or foreign matter at all times while stored at the Site.

C. The Contractor shall not be stack pipe bundles higher than the limits recommended by the Supplier. The bottom tier shall be kept off the ground on timbers, rails, or concrete. Stacking shall conform to manufacturer's recommendations. Field cutting of the pipe lengths prior to removing them from the stock pile shall not be allowed.

3.04 PIPE AND FITTING INSTALLATION – GENERAL REQUIREMENTS

A. The Contractor shall install steel pipe, fittings and specials in accordance with ASME B31.3 and the Supplier’s instructions where specified. Pipe, fittings and specials shall be installed true to alignment and rigidly supported. The deflection at pipe joints shall not exceed that recommended by the Supplier. All pipe and appurtenances connected to equipment shall be supported to prevent any strain on equipment and valves nozzles, and adjoining pipe flanges.

© 2017 CDM Smith
All Rights Reserved

B. The Contractor shall be responsible for the quality of the Work including joint preparation and finished welds. Under no circumstances shall permanent backer-rings or other consumable inserts be used for field or shop welding of steel pipe. Non-consumable refractory inserts shall be allowed with the Engineer's approval.

C. The Contractor shall assemble joints between straight lengths of carbon steel pipe with full-penetration groove welds. Welding requirements for all grades of stainless steel pipe are included in Section 15067. Full-penetration butt-welded field joints for pipe larger than 8 inch diameter shall be made using line-up clamps. Alternative methods to line-up clamps proposed by the Contractor shall be submitted with welding submittals for Engineer's approval.

D. The Contractor shall join socket-welded fittings, used with seamless mill grade stainless steel piping, as shown on the Drawings. Socket welded fittings shall only be used on oil fluid power system piping.

E. The Contractor shall prepare pipe joints by a machining process without damage to the pipe exterior. Cut ends shall be smooth and at a right angle to the axis of the pipe and beveled where required in accordance with the approved welding procedure specifications. Pipe and tube shall be deburred as part of the preparation of all joint configurations.

F. The Contractor shall understand that rust spots on new stainless steel pipe and fittings are nearly always due to surface contamination of free iron, and shall not be allowed. If free iron is not removed deep corrosion pits can result, especially in an aqueous process environment (water or wastewater). Pipe, tube and fittings shall be inspected by the Contractor upon delivery, and stored in a location that will prevent entry of contaminants prior to installation.

G. The Contractor shall be responsible for protection of all pipe, tube, fittings and valves, and adhere to the following mandatory requirements, and others specified in the paragraphs below:

1. The Contractor shall protected stainless steel materials from contact with carbon steel including but not limited to hoisting and rigging equipment, steel tables, storage racks and hand tools.

2. The Contractor shall not be bundle pipe and fittings using ferrous metal banding at the factory or Supplier's facility.

3. The Contractor shall not allow contact between wear surfaces of tools used for carbon steel fabrication and the surfaces of stainless steel pipe, tubes and fittings. These tools shall include abrasive grinding and cutting wheels, wheel cutters and rollers, threading taps and dies, tube bending equipment and all other bearing edge tools.

4. The Contractor shall use manual or powered wire brush tools for surface repair and joint preparation manufactured from stainless steel. No brushes with carbon steel wire shall be used for fabrication of stainless steel.

5. The Contractor shall shield stainless steel pipe, tube and fittings from all on-site carbon steel pipe and structural steel cutting and blasting operations.

6. The Contractor shall remove all exterior surface scratches; surface contamination by ferrous metal grinding kerf; contamination by paint markers and crayons etc.; and labels after installation.

H. The Contractor shall examine exterior surfaces of pipe, tube and fittings at the Site for free iron contamination by the ferroxyl test or other method. The Contractor shall clean all contaminated surfaces at the Site by pickling using a lean spray-applied pickling cleaner suitable for large surfaces system. Pickling shall be followed with passivation of the entire treated surface by a neutralizing rinse. The spray-applied pickling solution shall be:

1. Avesta Classic Cleaner 401®, manufactured by Avesta Finishing Chemicals, Orchard Park, New York.

2. Antox® 75E Pickling Cleaner, manufactured by Chemetall US, New Providence, New Jersey.

3. Kytex® Brightener 123, manufactured/distributed by Harvard Chemical Research, Atlanta, Georgia.

I. The Contractor shall clean austenitic alloy ASME pipe to be used for oxygen service in accordance with CGA G-4.4. All impurities including grease, organic solvents and other combustible materials shall be removed. The pipe shall be OD and ID immersion pickled and passivated at the mill, capped and wrapped prior to delivery to the site as specified above.

J. The Contractor shall perform field cutting of stainless steel pipe by mechanical wheel cutter or abrasive saw, leaving a smooth cut at right angles to the axis of the pipe. Abrasive cutting wheels to be used for stainless steel pipe and tube shall be new and designed to prevent iron, sulfur or chlorine contamination to the surface under preparation or repair, and the surfaces of adjacent piping. Pipe and tube shall be deburred as part of preparation for all joint configurations. Abrasive cutting wheels acceptable for use on stainless steel pipe and tube shall be:

1. Charger® cutting wheels manufactured by Norton/Saint-Gobain Abrasives, Worcester, Massachusetts.

2. Saitech Z-Tech® cutting wheels manufactured by United Abrasives/SAIT, Windham, Connecticut.

3. Specialist® cutting wheels manufactured by Flexovite, Angola, New York.

K. The Contractor shall perform field grinding of stainless steel pipe and tube, including root pass and enter-pass weld grinding using new grinding wheels. Grinding wheels shall be designed to prevent iron, sulfur or chlorine contamination to the surface under repair or the surfaces of adjacent piping. Abrasive grinding wheels acceptable for use on stainless steel pipe and tube shall be:

1. Norzon Plus® grinding wheels manufactured by Norton/Saint-Gobain Abrasives, Worcester, Massachusetts.

2. Saitech Pipeline® grinding wheels manufactured by United Abrasives/SAIT, Windham, Connecticut.

© 2017 CDM Smith
All Rights Reserved

3. Flexon® ZA24S grinding wheels manufactured by Flexovite, Angola, New York.

L. The Contractor shall use wire wheels, to remove defects on the pipe surface after installation, constructed of the same material as the pipe wall or Type 316 stainless steel for super austenitic and duplex stainless steel piping. The surface finish on the pipe shall meet the specified mill-applied surface finish or better.

3.05 BOLTING PROCEDURE FOR FLANGED JOINTS

A. The Contractor shall assemble flanged pipe joints in accordance with the gasket Supplier's instructions and as specified herein. The Contractor shall utilize calibrated bolting equipment capable of applying a measured torque to flange bolts during assembly. Bolting patterns, procedures and bolting equipment data shall be submitted to the Engineer prior to pipe fitting and bolting.

B. The Contractor shall use hydraulic cassette wrenches for assembly of flanged pipe joints requiring greater than 900 ft-lbs of assembly torque. The Contractor shall document each flanged joint assembly included in the Work using the "Flange Bolting Worksheet" at the end of this Section. Torque multipliers shall not be used. The Engineer reserves the right to require documentation of any flange joint requiring less than 900 ft-lbs of bolt torque.

C. The Contractor shall be responsible for calculation of the clamping forces and target assembly torque for assembly of all flanged pipe joints included in the Work. The Contractor's calculations shall take into consideration the pipe diameter, gasket Supplier's recommended assembly stress; bolt material tensile and yield stress; gasket Supplier's recommended bolt stress; pipe service, design and test pressures. Calculations shall be stamped by a professional engineer.

D. The Contractor shall be visually inspect and clean flange bolts, stud-bolts, nuts and washers prior to bolting. The Contractor shall lubricate bolts and nuts; if hardened washers are not used, lubricate the flange surface around the bolt holes. Excess lubricant on surfaces to receive protective coatings shall be removed by cleaning and degreasing solvent prior to applying a coating system.

E. The Contractor shall hand-tighten all nuts and bolts, then tighten them to 10 to 20% of the target torque. The initial torque shall not exceed 20% of the target torque. The bolts shall be tightened according to the pattern recommended by the gasket Supplier. The Contractor shall not reuse nuts removed during disassembly of existing or newly assembled joints. The Contractor shall dispose of used nuts in the presence of the Engineer.

F. The Contractor shall perform three rounds of bolt tightening on flanges having 4 to 8 bolts following hand tightening, first to 30 percent; then 60 percent; and finally 100 percent of the target torque calculated by the Contractor.

G. The Contractor shall perform four rounds of bolt tightening for flanges having 12 bolts or more, following hand tightening, first to 20 percent; then 40 percent; then 80 percent, and then 100 percent of target torque calculated by the Contractor.

H. The Contractor shall measure the gap between flanges following application of 100 percent of the target at every other bolt to confirm uniformity. The Contractor shall perform a final re-

© 2017 CDM Smith
All Rights Reserved

tightening to 100% of the target torque 24-hours after 100 percent tightening at the end of the initial bolting sequence. Every bolt and stud-bolt shall have a minimum of three full threads exposed beyond the nut following the final tightening.

I. The Contractor shall be responsible for filling out the "Flange Bolting Worksheet", located at the end of this Section, for all flanged joints on the project. The joints shall be identified in accordance with the designation included in the approved laying schedule. The form shall be submitted to the Engineer at the end of each workday, after the 24-hour re-tightening sequence, for filing in the project records.

3.06 HYDROSTATIC TESTING AFTER INSTALLATION

A. The Contractor shall perform hydrostatic acceptance testing on all piping systems. The Contractor shall provide all necessary utilities, labor, and equipment for testing and dispose all waste after the test including water.

B. The Contractor shall fill each piping system using water on aqueous piping systems. Hydraulic systems shall be tested at 1.5 times the maximum working pressure entered in the "Pipe, Tube and Hose Schedule" for 30 minutes. Acceptance criteria shall be no leakage or loss of pressure from the Work for duration of the test.

C. The Contractor shall repair any defective Work and any damage to new and existing structures caused by tests.

END OF SECTION
(Flange Bolting Worksheet Follows)

© 2017 CDM Smith
All Rights Reserved

STAINLESS STEEL FLANGE BOLTING WORKSHEET

Worksheet Instructions:

1. Fill in location/identification number as shown on the submitted lay sheets.
2. Fill in nominal bolt size.
3. Fill in flange finish.
4. Fill in lubricant used.
5. Initial either the "4-bolt and 8-bolt flanges" or "12-bolt flanges and above" procedure. Initials indicate that joint assembler adhered to round target torques and specified torque sequencing.
6. Fill in round target torques.
7. Initial the final round procedure. Initials indicate that joint assembler adhered to the final target torque and specified torque sequencing.
8. Identify with a mark the tightening method used.
9. Sign the form as required.
10. Submit completed form to Engineer as specified.

Location/Identification: _____ Nominal Bolt Size: _____

Gasket Contact Surface Finish on Flange: _____ Lubricant Used: _____

Final Target Torque (from Spec Tables): _____ ft-lbs

_____ 4-bolt and 8-bolt flanges:

Round 1 Target Torque _____ ft-lbs (30% of final target torque)
Round 2 Target Torque _____ ft-lbs (60% of final target torque)
Round 3 Target Torque _____ ft-lbs (100% of final target torque) (Note 1)

_____ 12-bolt flanges and above:

Round 1 Target Torque _____ ft-lbs (20% of final target torque)
Round 2 Target Torque _____ ft-lbs (40% of final target torque)
Round 3 Target Torque _____ ft-lbs (80% of final target torque)
Round 4 Target Torque _____ ft-lbs (100% of final target torque) (Note 1)

Note 1: Use rotational or clockwise tightening sequence, starting with bolt No. 1, for one complete round and continue until no further nut rotation occurs at 100% of the Final Target Torque value for any nut.

_____ Final Round – Re-torque after 24 hours to the final target torque.

TIGHTENING METHOD USED:

Torque Wrench	Hydraulic Cassette Wrench	Hydraulic Stud Tensioner
_____	_____	_____
_____ Last Calibration Date	_____ Last Calibration Date	_____ Last Calibration Date

Worksheet Information By: _____ Date: _____

Joint Assembler: _____ Date: _____

© 2017 CDM Smith
All Rights Reserved

THIS PAGE INTENTIONALLY LEFT BLANK

SCOPE OF SUPPLY FOR FRANKLIN WASTEWATER TREATMENT PLANT

ULTRAVIOLET DISINFECTION EQUIPMENT – TROJANUVSigna™

Project Name:	Franklin, TN
Consulting Engineer:	CDM Smith
Specification Section:	Request For Proposal and Request for Information #1 and #2
Including Addendum:	UV RFP Addendum 1 through 4 and; Franklin WRF Addendum 1 through 11
Submitted by:	Michael Shortt, Regional Manager
Trojan Quote:	204317 (December 21, 2017)

Design Criteria:

Current Peak Design Flow:	33 MGD (US)
UV Transmission:	65 % minimum
Total Suspended Solids:	Summer – 15 ppm (ave) 20 ppm (max) Winter – 40 ppm (ave) 45 ppm (max)
Discharge Limit:	126 E.coli per 100 mL, Monthly Average 941 E.coli per 100 mL, Daily Maximum
Validated End Of Lamp Life:	0.86
Validated Fouling Factor:	0.94

We are pleased to submit the following scope of equipment based on the above criteria

Please refer inquiries to Trojan Manufacturer's Representative:

Representative: Bill Allen
SOUTHERN SALES COMPANY, INC.
Phone: (615) 254 0066
Email: ballen@southernsalesinc.com

This proposal has been respectfully submitted by,

Trojan Technologies

Michael Shortt
Regional Manager

GENERAL CONFIGURATION

The TrojanUVSigna™ equipment described in this Scope of Supply consists of two (2) channels with two (2) UV banks in each channel.

Unless otherwise indicated in this proposal all conduit, conductors, local disconnects, channel grating, and/or equipment platforms are the responsibility of the CONTRACTOR and are not included in Trojan's Scope of Supply.

UV BANKS

Trojan's Responsibility:
Each bank supplied will consist of TrojanUV Solo Lamps™, quartz sleeves, supporting structures, ActiClean™ chemical/mechanical cleaning system and an automatic raising mechanism. UV lamps are powered from an individual electric feed from a lamp driver located in a Power Distribution Center (PDC).

Model and Make:	Standard System Trojan UVSigna
Quantity:	4 UV banks (2 banks per channel) Each bank will be supplied with 26 UV lamps and quartz sleeves, one (1) UV sensor, one (1) ActiClean system and one (1) automatic raising mechanism
Rating:	Type 6P / IP68
Material:	316L Stainless Steel
Approximate Weight:	2700 lbs.

Installation Contractor's Responsibility:
The Installation Contractor shall be responsible for setting in place and securing the culvert frame and for pouring the concrete culvert around the frame. Contractor shall supply eight (8) 1" diameter 316 SST bolts (minimum 22" in length) for each pivot frame to be mounted on the culvert per structural load requirements provided (one pivot frame per bank). The Contractor shall install and align the UV bank, seal and the automatic raising mechanism per instructions provided. Refer to Trojan-supplied drawings for details.

SYSTEM CONTROL CENTER

Trojan's Responsibility:
The System Control Center (SCC) is provided to monitor and control the UV disinfection system. If PLC is provided, Trojan will provide a PLC I/O and soft address map to assist the Contractor with integration of the UV PLC and Plant SCADA system. The UV SCC shall consist of the following:

Quantity Supplied	1 SCC will be supplied
Location:	Floor-mounted
Heater:	Internal panel heater supplied
Controller Type:	Allen Bradley Control Logix – Model L33ERM
Operator Interface:	Allen Bradley, Panelview Plus 7, 1500
Material / Rating:	316 Stainless Steel (Type 4X, IP 66)
Approximate Weight:	400 lbs.

Installation Contractor's Responsibility:
The Installation Contractor to be responsible for mounting the SCC as indicated on the drawings. The Installation Contractor to be responsible for the supply, installation and connection of the following at the SCC:

1. One (1) 120V, 1 phase, 2 wire + GND, 60 Hz, 1.8kVA provided from Trojan supplied UPS panel.
2. One (1) bond link from plant grid to SCC in accordance with applicable codes and standards.
3. One (1) 4 – 20 mA DC analog signal from plant flow meter

.

4. One (1) serial communication link, Modbus 485, consisting of one twisted shielded pair, 18 gauge maximum, from the HSC and other PDCs (daisy chained)
5. One (1) 4 – 20 mA DC analog signals from the HACH on-line UVT monitor
6. Serial communication link to SCADA via Fiber Optic Ethernet.
7. Two (2) pair 24VDC 18 gauge minimum discrete signal to each high water level sensor
8. Discrete input and output control wiring (10 conductors) from each inlet gate to SCC
9. Open command discrete output, two (2) conductors, 20 gauge min, from SCC to each weir gate
10. Close command discrete output, two (2) conductors, 20 gauge min, from SCC to each weir gate
11. Remote mode discrete input, two (2) conductors, 20 gauge min, to SCC from each weir gate
12. Gate position analog input, one (1) twisted shielded pair, 24 gauge min, to SCC from each weir gate

POWER DISTRIBUTION CENTERS

Trojan's Responsibility:
The Power Distribution Center (PDC) distributes power to the UV lamps and shall consist of the following:

Quantity Supplied:	4 PDC(s) will be supplied
Method of Cooling:	Air-conditioning
Heater:	Internal panel heater supplied
Material / Rating:	316L Stainless Steel (Type 4X, IP 66)
Approximate Weight:	2200 lbs. each

Installation Contractor's Responsibility:
The Installation Contractor to be responsible for setting in place and bolting the PDC in location. The Installation Contractor to be responsible for the supply, installation and connection of the following at each PDC:

1. One (1) 480V, 3 phase, 4 wire + GND, 50/60 Hz, 29.6 kVA power feed with local disconnect to each of 4 PDC(s)
2. One (1) bond link from plant grid to PDC's (underside of panel)
3. One (1) bond link, from each UV bank to the corresponding PDC in accordance with applicable codes and standards
4. One (1) communication link, Modbus, shielded twisted pair from the SCC and daisy chained to other PDCs and HSCs.
5. One (1) discrete water level signal (2 conductors) from Trojan-supplied Level Sensor Control Box
6. Connection of Bank-In-Place sensor cables from each UV bank to corresponding PDC (Qty.: 1 – cables supplied by Trojan – 4 total).
7. Connection of Seal-In-Place sensor cables from each UV bank to corresponding PDC (Qty.: 1 – cables supplied by Trojan – 4 total).
8. One (1) UVI sensor cable form each bank (Qty: 1 – cables supplied by Trojan – 4 total)
9. Connection and termination of lamp cables from the UV bank (Qty: 104 total – cables supplied by Trojan)

HYDRAULIC SYSTEM CENTERS

Trojan's Responsibility:
The Hydraulic System Center (HSC) houses the ancillary equipment required to operate the quartz sleeve cleaning system and automatic raising mechanism.

Quantity Supplied:	Two (2) HSC(s) will be supplied (1 per channel)
Materials / Rating:	316 Stainless Steel (Type 4X, IP 66)
Heater:	Internal panel heater supplied
Approximate Weight:	360 lbs.

Installation Contractor's Responsibility:
The Installation Contractor to be responsible for setting in place and bolting the HSC(s) as shown on the contract drawings. The HSC(s) must be located within 50 feet (15 meters) of the farthest PDC. The Installation Contractor shall be responsible for the supply, connection and installation of the following at each HSC:

1. One (1) 480V, 3 phase, 3 wire + GND, 60 Hz, 2.5 kVA power feed with local disconnect
2. One (1) bond link from plant grid to HSC(s)
3. One (1) bond link from the UV bank, in accordance with applicable codes and standards
4. Cut and crimp hydraulic hoses supplied (support required from local Parker Store)
5. Connection of the hydraulic hoses from HSC (hoses and connections supplied by Trojan)
6. One (1) serial communication link, Modbus, consisting of one (1) 3 conductor shielded cable, 18 gauge maximum from the SCC and HSC and other PDCs (daisy chained)

WATER LEVEL CONTROLLER

Trojan's Responsibility
Level control devices are required to maintain and control the effluent level in the channel, regardless of flow rate.

Quantity Supplied:	Two (2) Water Level Controller(s)
Description:	Motorized Weir Gate (26-Lamp Bank)
Manufacturer:	Whipps, Inc.
Actuator:	AUMA SAR 10.2 Electric Actuator
Material of Construction:	316L SST
Effective Weir Width:	60"
Mounting:	Face-mounted
Mounting Anchors:	Supplied with each Gate
Approximate Weight:	TBD
Control Method:	Digital Pulsed Open/Close Position Signals from the UV SCC

Installation Contractor's Responsibility:
The Installation Contractor to be responsible for setting in place, grouting and sealing the level control weir gate and the installation of the following connections:

1. One (1) 480 Volt, 3 phase, 3 wire, 15 AMP (plus ground) feed to each weir gate
2. Open command discrete output, two (2) conductors, 20 gauge min, from SCC to each weir gate
3. Close command discrete output, two (2) conductors, 20 gauge min, from SCC to each weir gate
4. Remote mode discrete input, two (2) conductors, 20 gauge minimum, to SCC from each weir gate
5. Gate position analog input, one (1) twisted shielded pair, 24 gauge minimum, to SCC from each weir gate

LEVEL SENSOR CONTROL BOX

Trojan's Responsibility:
Trojan will provide wall mounted Level Sensor Control Box 24" w x 24" h x10" d (size to be confirmed) to provide power and relays for low level sensors.

Quantity Supplied:	One (1) Level Sensor Control Box to be supplied
Materials / Rating:	316 Stainless Steel (Type 4X)
Approximate Weight:	40 lbs

Contractor's Responsibility:
The Contractor to be responsible for mounting the Control Box as indicated on the drawings. The Contractor to be responsible for the supply, installation and connection of the following at the Level Sensor Control Box:

1. One (1) 120 Volt, 1 phase, 2 wire (plus ground) power supply.
2. Two (2) pair 12VDC 18 gauge minimum low level discrete signal from Low Level Sensor (1 / Channel)
3. Four (4) pair 12VDC 18 gauge minimum low level discrete signal to PDCs (1 / PDC).

ULTRASONIC WATER LEVEL SENSOR

Trojan's Responsibility:
An ultrasonic level sensor will be supplied (per channel) to monitor channel effluent levels specifically for weir gate control. The transducer will be supplied with a sufficient length of cable to distribute to the monitoring panel

Quantity Supplied: Two (2) Ultrasonic Level Sensors and Monitors to be supplied

Installation Contractor's Responsibility:
The Contractor shall be responsible for mounting the transducer and bracket in the UV channel and for mounting the monitor panel adjacent to the channel. Contractor shall distribute the following cable/wiring between these two components and the SCC in appropriate conduit:

1. One (1) 120 Volt, 1 phase, 2 wire (plus ground) power supply
2. Two (2) 4-20mA analog signal from the Level Sensor Monitor to the System Control Center (SCC)
3. One (1) communication link using 33 feet of cable (supplied by Trojan) for each Level Sensing Transducer to the Level Sensor Monitor

HIGH AND LOW WATER LEVEL SENSOR KITS

Trojan's Responsibility:
The water level sensors are located upstream (high) and downstream (low) of the UV System and provides a digital signal to alarm and/or shut down tothe UV System if the water level condition.

Quantity Supplied:	Four (4) water level sensor(s) to be supplied
Approximate Weight:	10 lbs.

Installation Contractor's Responsibility:
The Installation Contractor to be responsible for setting in place and bolting the water level sensor panel to the effluent channel wall. The Installation Contractor shall also be responsible for supplying mounting hardware, watertight conduit and for supplying and connecting the following from each level sensor:

1. One (1) discrete signal (pair of 12V DC, 18 gauge) from the low water level sensor probe to the level sensor Control Box (2 total).
2. One (1) discrete signal (pair of 24V DC, 18 gauge) from the high water level sensor probe to the SCC (2 total).

INLET ISOLATIONGATES

Trojan's Responsibility
Upstream slide gates are required to isolate the channels depending on flow rates and requirements for maintenance.

Quantity Supplied:	Two (2) gates to be supplied
Description:	Sluice Gate
Manufacturer:	Whipps, Inc. (Series 920)
Actuator:	AUMA SA 10.2 Electric Actuator
Material of Construction:	316 Stainless Steel frame and yoke
Mounting:	Face Mounted
Approximate Weight:	1000 pounds each
Size:	54"x 60"

Installation Contractor's Responsibility:
The Installation Contractor to be responsible for setting in place, grouting and sealing the level control weir gate and the installation of the following connections:

1. One (1) 480 Volt, 3 phase, 3 wire, (plus ground) feed with local disconnect
2. Discrete input and output control wiring (10 conductors) to SCC

UV TRANSMISSION MONITOR

Trojan's Responsibility:
Description: One (1) Hach SC200 UVT monitor with one (1) submersible probe, one (1) OptiQuant SAC UV-254 analyzer controller and one (1) 25 ft / 7.6 m cable between the probe and the controller.

Enclosure Rating:	Type 4X
Controller Dimensions:	12 x 12 x 4 in
Operating Temperature:	Probe: 32 to 140°F. Controller: 14 to 122 ^{o}F
Approximate Weight:	30 pounds (probe and controller)
Probe Immersion Depth:	up to 6 feet

Installation Contractor's Responsibility:
The Installation Contractor to be responsible for setting in place and bolting the controller panel and the probe. The Installation Contractor shall also be responsible for the supply, installation and connection of the following:

1. One (1) 120 Volt, 1 phase, 2 wire (plus ground), 14 VA power supply
2. One (1) 4-20mA DC Analog communications link between the Controller and the SCC
3. Installation of sensor communication cable between probe and controller (cable supplied by Trojan)
4. Supply bolts required for mounting controller and probe to the channel edge

SPARE PARTS AND SAFETY EQUIPMENT

Trojan's Responsibility:
The following spare parts and safety equipment will be supplied with the UV system:

20	UV lamps (10 lamps provided for lamp output testing)
10	Quartz sleeves
20	Wiper Seals
10	O-Rings
1	RS Logix and RSView development software (service edition)
2	UV Face Shields
1	Spare Handwheel and Gasket for inlet gates
1	Spare UV Intensity Sensor

5	Lamp Drivers
1 ea	Spare PLC I/O Cards and Power Supply
1	Spare HSC pump motor
1	Operators kit (including face shield, hydraulic fluids, gloves, UV Warning Signs and cleaning solution)

ADDITIONAL EQUIPMENT

480V TRANSFORMERS

Trojan's Responsibility:
Description: Four (4) x 45 kVA 316 SST Transformers
Manufacturer: Hammond

Installation Contractor's Responsibility:
The Installation Contractor to be responsible for setting in place and bolting the controller panel and the probe. The Installation Contractor shall also be responsible for the supply, installation and connection of the following:

1. One (1) 480 Volt, 3 phase, 3 wire (plus ground power supply for each transformer
2. Connection of 480Y/277V power to each of the PDC units per channel

DOCUMENTATION (SHOP DRAWINGS AND O&M MANUALS)

Trojan's Responsibility:
The following documentation will be supplied to the Contractor by Trojan per the following schedule:

- One electronic copy of submittal shop drawings 4-6 weeks after receipt of written purchase order. Weir gate submittals may require additional time from gate manufacturers
- One (1) electronic copy of Trojan Standard O&M manuals at time of equipment delivery (hardcopies available upon request)

DELIVERY, START-UP AND TRAINING

Equipment shipped 14 – 16 weeks after approval of Shop Drawings
Gates and actuator delivery is estimated to be 16-18 weeks.
The start-up and testing will be provided as specified.

MICROBIOLOGICAL PERFORMANCE TESTING

Trojan's Responsibility:
Trojan will supply a performance testing protocol to the Contractor to be forwarded to the Engineer for approval. Trojan will produce the final test report (based on data supplied by the independent lab) and will forward the final report to the Contractor.

Installation Contractor's Responsibility:
The Installation Contractor to cover all associated on site costs for performance testing (independent lab services, bottles, shipment, etc.). The Contractor to be responsible for completing the performance testing as per the testing protocol supplied by Trojan and approved by the Eng

LAMP OUTPUT TESTING

Trojan's Responsibility:
Trojan will supply arrange to remove 10 UV system lamps following their 100 hour burn in. These lamps will be returned to Trojan for lamp output testing, measurements recorded, and then lamps returned to site. The returned lamps will be installed back into the UV Banks and again removed at 5,000 hours of operation where they will again be returned to Trojan for analysis. Lamp output results will be provided to CDM Smith for review.

POWER CONSUMPTION TESTING

Trojan's Responsibility:
Trojan will supply a protocol to the Contractor to be forwarded to the Engineer for approval. Trojan will provide a technician to site to assist in testing

Installation Contractor's Responsibility:
The Installation Contractor will provided power measurement equipment which must have calibration certificates within 6 months of the test date.

HARMONICS TESTING

Trojan's Responsibility:
Trojan will hire a 3rd party firm to determine on-site harmonics at the point of common coupling. Results will be provided upon provision of the report to Trojan.

WARRANTY

Trojan's Responsibility:
Trojan Technologies will warrant the Trojan UVSigna equipment and parts for 18 calendar months after system acceptance. A warranty bond will be provided at prior to system commissioning based on an 18 month term.
UV lamps shall be warranted for 15,000 hours prorated after 9,000 hours.
Lamp drivers shall be warranted for 10 years, prorated after 1 year.
Refer to attached Terms and Conditions for additional warranty details.

SELLING PRICE: $ 806,353.00 (USD)

Selling price does not include any duties or taxes that may be applicable
Freight included if destination is within North America

PAYMENT TERMS

15% after approved submittal
80% upon delivery of equipment to site
90% Acceptance of Functional Testing
100% Acceptance of start-up/Performance Testing and Warranty Bond
Net 30 Days
If UV System Start-up is required within 30 days of shipment, Trojan requires 95% payment unless agreed upon in writing before authorizing system Start-up.

TERMS AND CONDITIONS

Attached

© 2013 CDM SMITH ALL RIGHTS RESERVED.
REUSE OF DOCUMENTS: THESE DOCUMENTS AND DESIGNS PROVIDED BY PROFESSIONAL SERVICE, INCORPORATED HEREIN, ARE THE PROPERTY OF CDM SMITH AND ARE NOT TO BE USED, IN WHOLE OR PART, FOR ANY OTHER PROJECT WITHOUT THE WRITTEN AUTHORIZATION OF CDM SMITH.

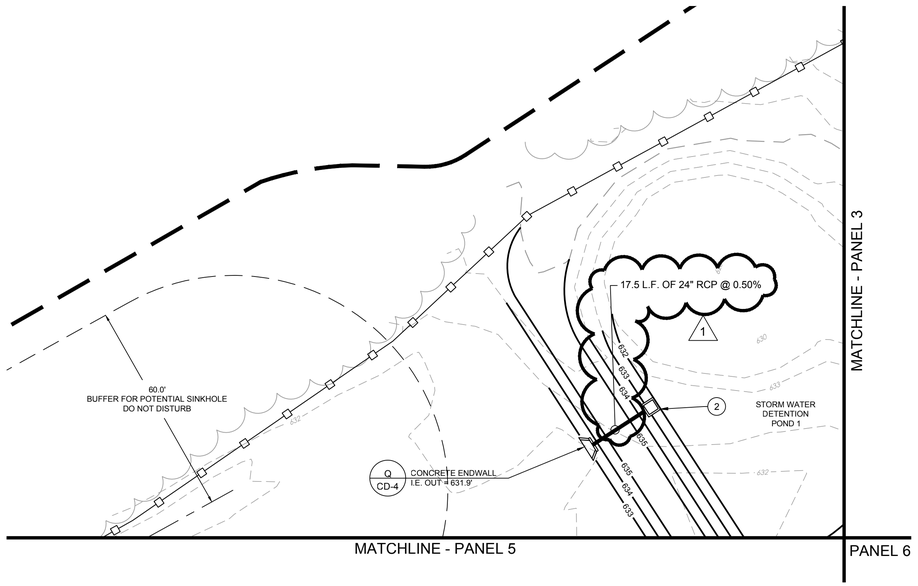

DETAIL KEY CODE		
CODE	DESCRIPTION	DTL #/SHT #
1	CONCRETE CATCH BASIN WITH JBS 4041 FRAME & GRATE	N / CD-4
2	V-NOTCH WEIR OUTLET STRUCTURE	V / CD-10

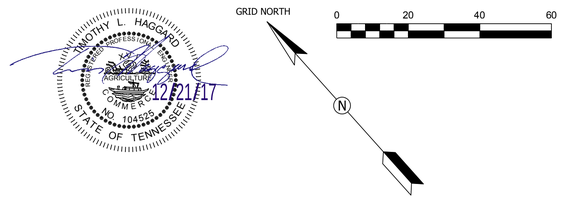

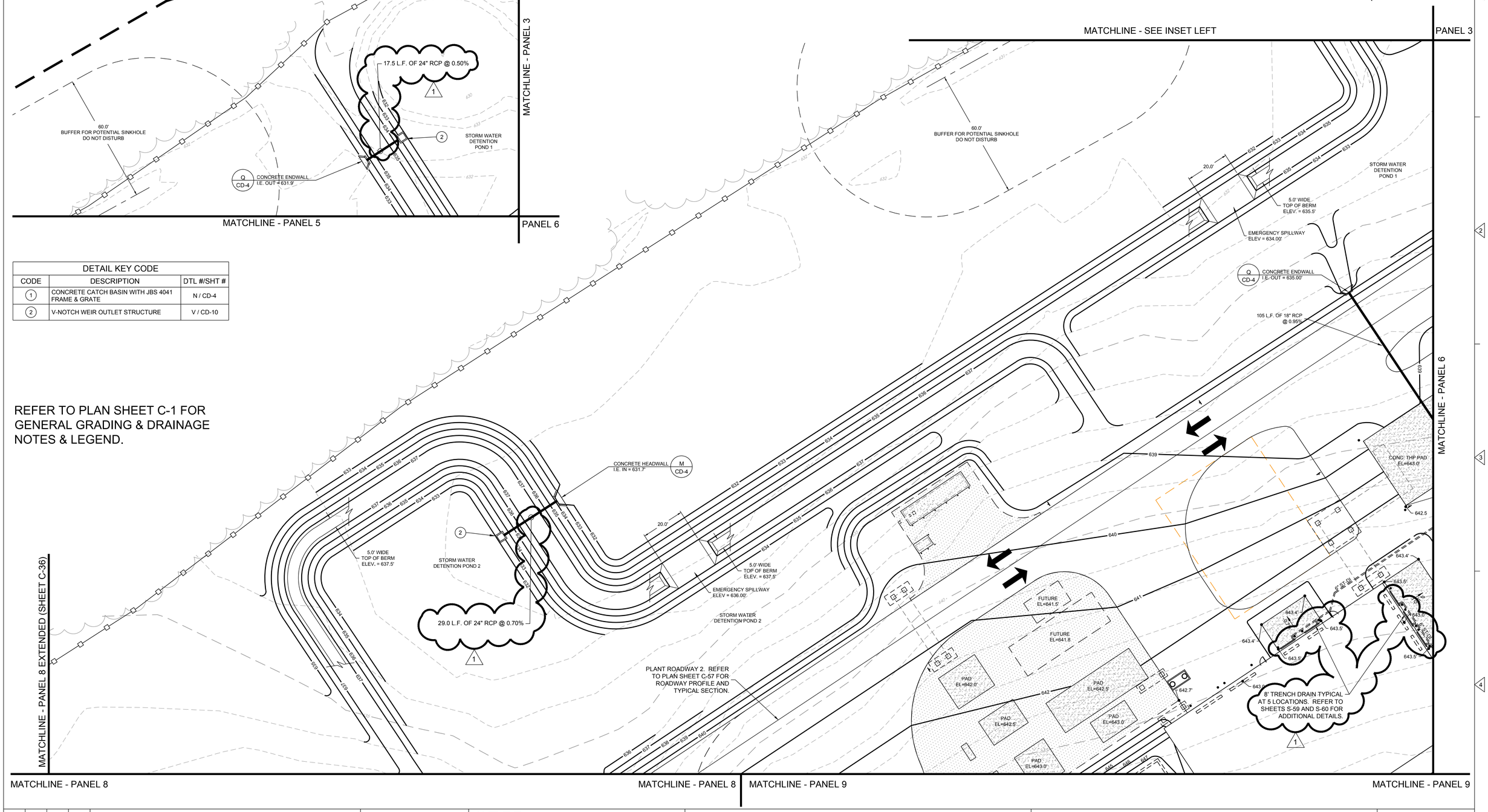

REV. NO.	DATE	DRWN	CHKD	REMARKS
1	12.21.17	TLH	CDC	ADDENDUM NO. 12

DESIGNED BY: TLH
DRAWN BY: TLH
SHEET CHK'D BY: RPH
CROSS CHK'D BY: RPH
APPROVED BY: T. HAGGARD
DATE: AUGUST 2017

CDM Smith
210 25th Avenue North, Suite 1102
Nashville, TN 37203
Tel: (615) 320-3161

CIVIL INFRASTRUCTURE ASSOCIATES
307 Hickerson Drive
Murfreesboro, TN 37129
Tel: (615) 663-7678

CITY OF FRANKLIN, TENNESSEE
WATER RECLAMATION FACILITY
MODIFICATIONS AND EXPANSION PROJECT
COF CONTRACT NO. 2015-0163

GRADING AND DRAINAGE PLAN PANEL 5

PROJECT NO. 14915-96594-WRF
FILE NAME: CoF_WRF_Civil
SHEET NO.
C-32

ISSUED FOR BID

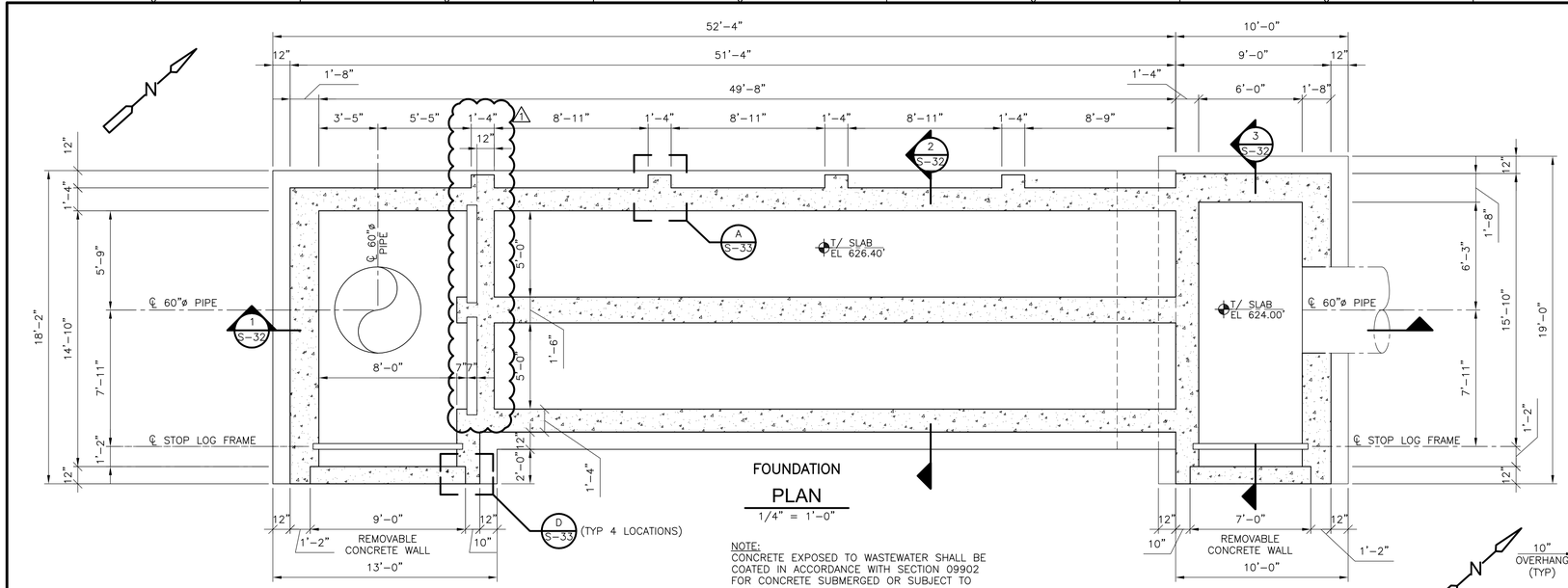

FOUNDATION

PLAN

1/4" = 1'-0"

NOTE:
CONCRETE EXPOSED TO WASTEWATER SHALL BE COATED IN ACCORDANCE WITH SECTION 09902 FOR CONCRETE SUBMERGED OR SUBJECT TO SPLASHING.

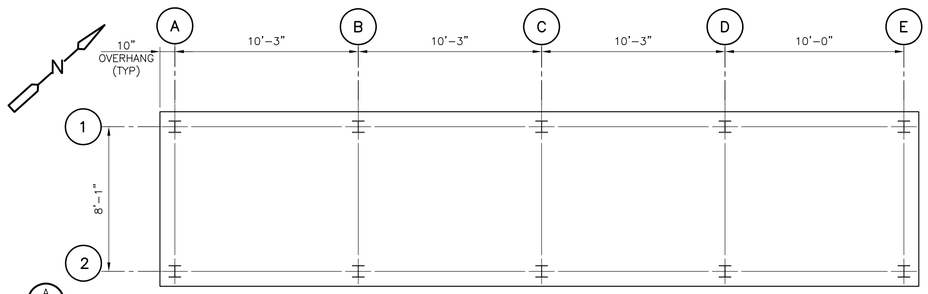

CANOPY ROOF FRAMING

PLAN

1/4" = 1'-0"

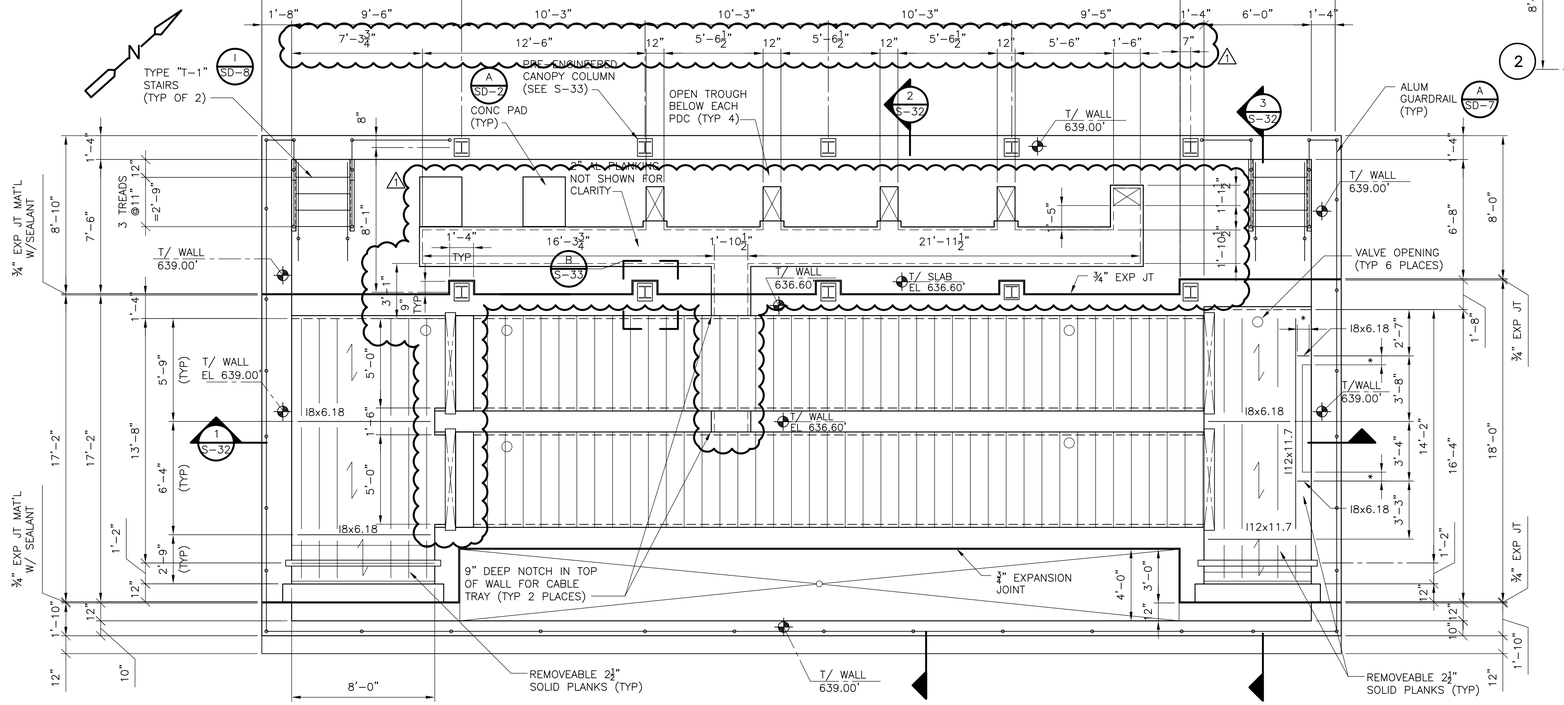

TOP PLAN

PLAN

1/4" = 1'-0"

DESIGN LOAD DATA – UV STRUCTURE

SEISMIC	
BASIC SEISMIC FORCE RESISTING SYSTEM:	CONCRETE CAST-IN-PLACE WALL DESIGNED IN ACCORDANCE WITH ACI 350.3
SEISMIC RESPONSE COEFFICIENTS	Ci : 0.314 Cc : 0.126 Ct : 0.126
RESPONSE MODIFICATION FACTOR, R:	3.0
ANALYSIS PROCEDURE USED:	EQUIVALENT LATERAL FORCE PROCEDURE
DESIGN BASE SHEAR:	$[(Pi+Pw+Pr)^2+Pc^2+Py^2]^{0.5}$
AVERAGE ALLOWABLE BEARING PRESSURE:	1500 PSF

REFER TO SHEET S-1 FOR DESIGN LOAD DATA THAT IS THE SAME FOR ALL STRUCTURES.

NOTES:

1. POWER AND DATA CABLE TRENCH LAYOUT AND DIMENSIONS SHALL BE VERIFIED WITH UV MANUFACTURER PRIOR TO FABRICATION AND INSTALLATION.
2. PRELIMINARY COLUMN LOAD TABLE AND WIND PRESSURE FOR COMPONENT AND CLADDING TABLE AND KEY PLAN ARE LOCATED ON SHEET S-33

JUSTIN S. BOGGS REGISTERED ENGINEER AGRICULTURE COMMISSION NO. 180060 STATE OF TENNESSEE 12/21/17

REV. NO.	DATE	DRWN	CHKD	REMARKS
1	12/17	PCS	JSB	ADDENDUM NO. 12
	12/17	PCS	JSB	ADDENDUM NO. 9

DESIGNED BY: E. RIVERA
DRAWN BY: P. DOUGLAS
SHEET CHK'D BY: T. VERWEY
CROSS CHK'D BY: C. CARDEN
APPROVED BY: J. BOGGS
DATE: AUGUST 2017

CDM Smith
Parkview Towers
210 25th Avenue North, Suite 1102
Nashville, TN 37203
Tel: (615) 320-3161

CITY OF FRANKLIN, TENNESSEE
FRANKLIN WRF
MODIFICATIONS AND EXPANSION PROJECT
COF CONTRACT NO. 2015-0163

UV STRUCTURE
FOUNDATION AND TOP PLAN

PROJECT NO 14915-96594-WRF
FILE NAME: S031UVPL.DWG
SHEET NO.
S-31

ISSUED FOR BID

XREFs: [CDMS_2436, XSUVBS00] Images: []
Last saved by: BOGGSJS Time: 12/21/2017 9:14:26 PM
pw:\\pw.cdmsmith.com:PW_PL1\14915\96594\04 Design Services NM_Bid\04 Structural\10 CADD\S031UVPL.dwg
©2017 CDM SMITH ALL RIGHTS RESERVED.
REUSE OF DOCUMENTS: THESE DOCUMENTS AND DESIGNS PROVIDED BY PROFESSIONAL SERVICE, INCORPORATED HEREIN, ARE THE PROPERTY OF CDM SMITH AND ARE NOT TO BE USED, IN WHOLE OR PART, FOR ANY OTHER PROJECT WITHOUT THE WRITTEN AUTHORIZATION OF CDM SMITH.

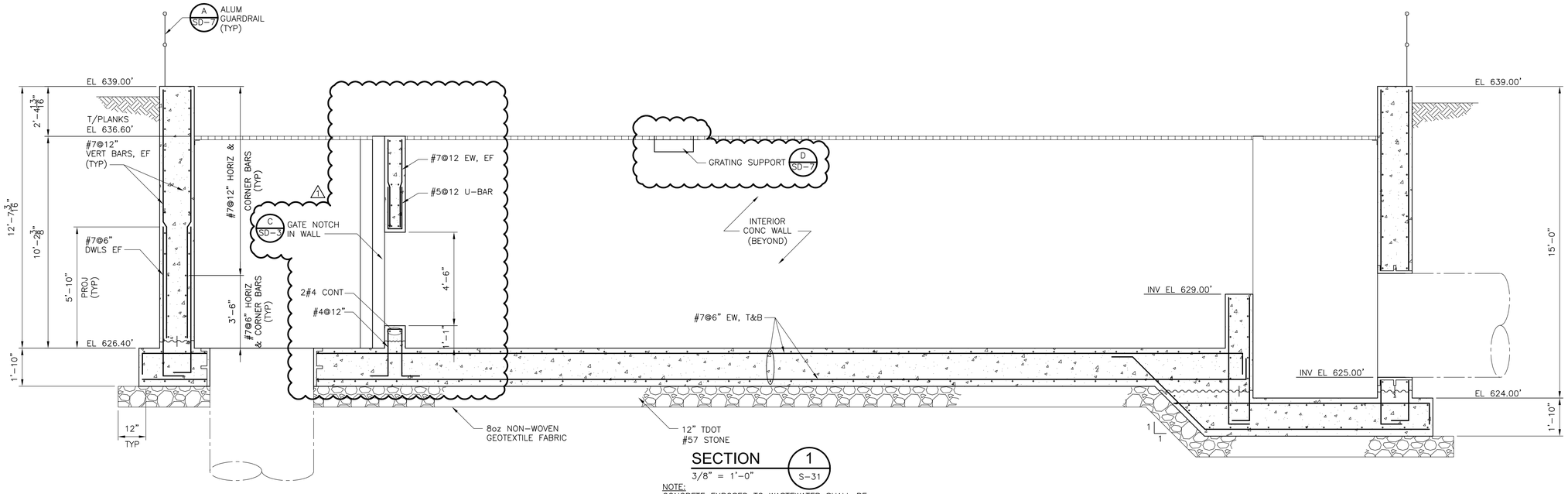

SECTION 1
3/8" = 1'-0" — S-31

NOTE:
CONCRETE EXPOSED TO WASTEWATER SHALL BE COATED IN ACCORDANCE WITH SECTION 09902 FOR CONCRETE SUBMERGED OR SUBJECT TO SPLASHING.

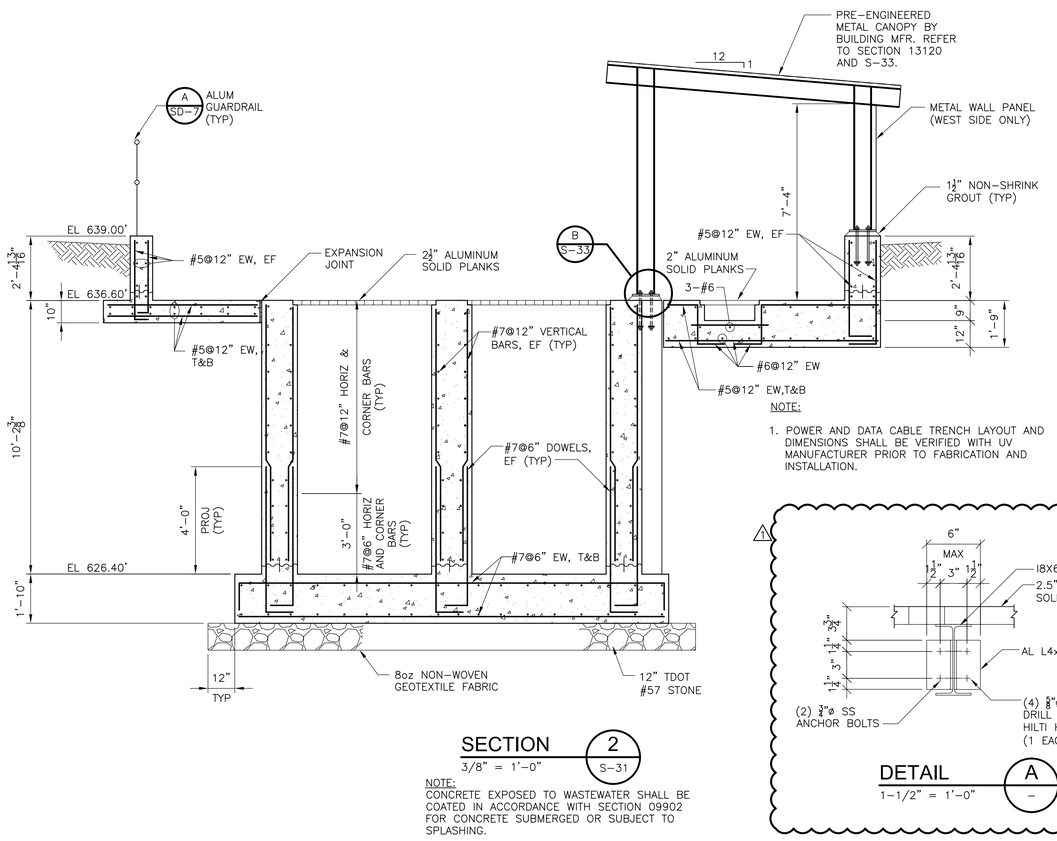

NOTE:
1. POWER AND DATA CABLE TRENCH LAYOUT AND DIMENSIONS SHALL BE VERIFIED WITH UV MANUFACTURER PRIOR TO FABRICATION AND INSTALLATION.

SECTION 2
3/8" = 1'-0" — S-31

NOTE:
CONCRETE EXPOSED TO WASTEWATER SHALL BE COATED IN ACCORDANCE WITH SECTION 09902 FOR CONCRETE SUBMERGED OR SUBJECT TO SPLASHING.

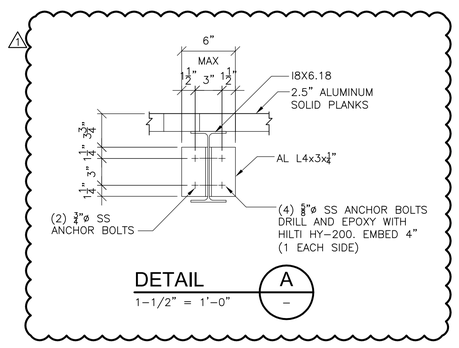

DETAIL A
1-1/2" = 1'-0" — –

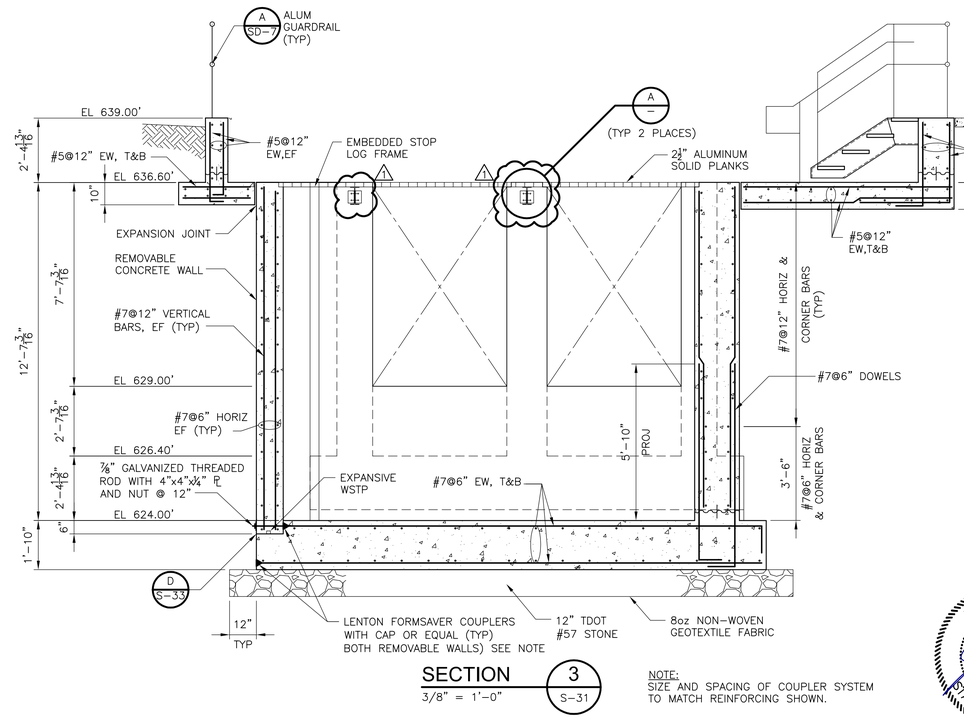

SECTION 3
3/8" = 1'-0" — S-31

NOTE:
SIZE AND SPACING OF COUPLER SYSTEM TO MATCH REINFORCING SHOWN.

JUSTIN S. BOGGS — REGISTERED ENGINEER — AGRICULTURE — COMMERCE — 119080 — STATE OF TENNESSEE — 11/1/17

REV. NO.	DATE	DRWN	CHKD	REMARKS
1	12/17	PCS	JSB	ADDENDUM NO. 12

DESIGNED BY: E. RIVERA
DRAWN BY: P. DOUGLAS
SHEET CHK'D BY: T. VERWEY
CROSS CHK'D BY: C. CARDEN
APPROVED BY: J. BOGGS
DATE: AUGUST 2017

CDM Smith
Parkview Towers
210 25th Avenue North, Suite 1102
Nashville, TN 37203
Tel: (615) 320-3161

CITY OF FRANKLIN, TENNESSEE
FRANKLIN WRF
MODIFICATIONS AND EXPANSION PROJECT
COF CONTRACT NO. 2015-0163

UV STRUCTURE SECTIONS

PROJECT NO 14915-96594-WRF
FILE NAME: S032UVSC.DWG
SHEET NO. S-32

ISSUED FOR BID

XREFs: [CDMS_2436_XSUVBS00] Images: []
Last saved by: BOGGSJS Time: 12/21/2017 9:03:32 PM
pw:\\pw.cdmsmith.com:PW_PL1\14915\96594\04 Design Services NM_Bld\04 Structural\10 CADD\S032UVSC.dwg
©2017 CDM SMITH ALL RIGHTS RESERVED.
REUSE OF DOCUMENTS: THESE DOCUMENTS AND DESIGNS PROVIDED BY PROFESSIONAL SERVICE, INCORPORATED HEREIN, ARE THE PROPERTY OF CDM SMITH AND ARE NOT TO BE USED, IN WHOLE OR PART, FOR ANY OTHER PROJECT WITHOUT THE WRITTEN AUTHORIZATION OF CDM SMITH.

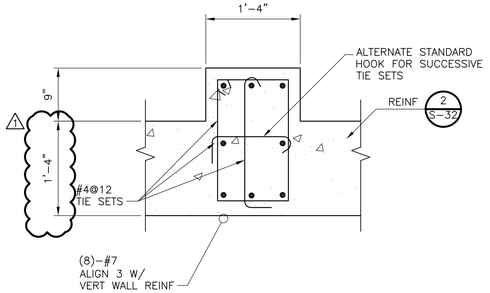

TYP COLUMN PIER

DETAIL A — 1" = 1'-0" — S-31

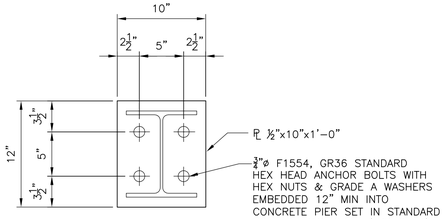

COLUMN BASEPLATE

DETAIL B — 1 1/2" = 1'-0" — S-31

NOTE: ANCHOR BOLT SYSTEM, LAYOUT AND BASE PLATE SIZE ARE PRELIMINARY AND SHALL NOT BE FABRICATED UNTIL THE SUBMITTAL OF THE PRE-ENGINEERED CANOPY ANCHOR BOLT LOCATIONS, BASE PLATE SIZE AND FOUNDATION REACTIONS HAVE BEEN REVIEWED AND ADJUSTMENTS TO THE FOUNDATION HAVE BEEN COMPLETED, IF REQUIRED, BY THE ENGINEER.

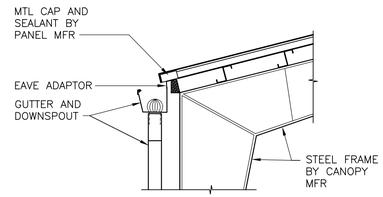

DETAIL C — NTS

NOTE: PROVIDE DOWNSPOUT AT EACH CANOPY COLUMN ON NORTH SIDE OF STRUCTURE.

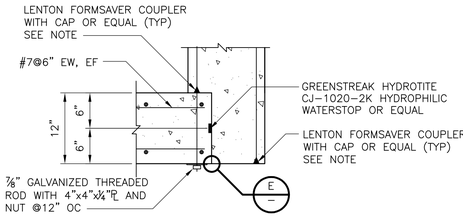

DETAIL D — NTS — S-31

NOTE: SIZE AND SPACING OF COUPLER SYSTEM TO MATCH REINFORCING SHOWN.

PRELIMINARY COLUMN LOAD TABLE

LOAD CASE/ COMBINATION	VERTICAL REACTION		HORIZONTAL REACTION	
	DOWNWARD	UPWARD	PARALLEL TO FRAME	PERPENDICULAR TO FRAME
UNFACTORED (ASD)	3.0k	2.2k	1.7k	0.3k
DEAD	0.5k	0k	0.05	0k
COLLATERAL	0.6k	0k	0.05	0k
ROOF LIVE	1.1k	0k	0.1k	0k
SNOW	0.6k	0k	0.1k	0k
WIND PARALLEL TO FRAME	2.5k	5.0k	2.9k	0.2k
WIND PERPENDICULAR TO FRAME	0.7k	2.2k	0.2k	0.3k
SEISMIC PARALLEL TO FRAME	0.4k	0.4k	0.3k	0k
SEISMIC PERPENDICULAR TO FRAME	0.4k	0.4k	0.1k	0.3k

PRELIMINARY COLUMN LOAD TABLE NOTES:

1. FOUNDATION SHOWN ON S-31 HAS BEEN DESIGNED FOR PRE-ENGINEERED CANOPY LOADS (UNFACTORED) AS SHOWN IN THE PRELIMINARY COLUMN LOAD TABLE. FOUNDATION SHALL NOT BE FABRICATED OR CONSTRUCTED UNTIL THE SUBMITTAL OF THE PRE-ENGINEERED BUILDING ANCHOR BOLT LOCATIONS AND FOUNDATION REACTIONS HAVE BEEN REVIEWED AND ADJUSTMENTS TO THE FOUNDATION HAVE BEEN COMPLETED, IF REQUIRED, BY THE ENGINEER.

WIND PRESSURE (PSF) FOR COMPONENT AND CLADDING *

EFFECTIVE WIND AREA (SQ. FT.)	PRESSURE (+) / SUCTION (-)													
	ROOF (PSF)										WALL (PSF)			
	ZONE 1		ZONE 2		ZONE 2'		ZONE 3		ZONE 3'		ZONE 4		ZONE 5	
10	22.6	-43.9	22.6	-49.2	22.6	-57.2	22.6	-62.5	22.6	-83.8	38.6	-41.0	38.6	-48.1
20	21.8	-43.9	21.8	-48.4	21.8	-56.4	21.8	-57.7	21.8	-75.8	37.2	-39.6	37.2	-45.5
50	20.7	-43.9	20.7	-47.3	20.7	-55.3	20.7	-51.3	20.7	-65.2	35.6	-38.0	35.6	-42.3
100	20.0	-43.9	20.0	-46.6	20.0	-54.5	20.0	-46.6	20.0	-57.2	34.3	-36.7	34.3	-39.6
500	20.0	-43.9	20.0	-46.6	20.0	-54.5	20.0	-46.6	20.0	-57.2	31.4	-33.8	31.4	-33.8

* FOR EFFECTIVE WIND AREAS BETWEEN THOSE GIVEN, VALUE MAY BE INTERPOLATED, OTHERWISE USE THE VALUE ASSOCIATED WITH THE LOWER EFFECTIVE WIND AREA

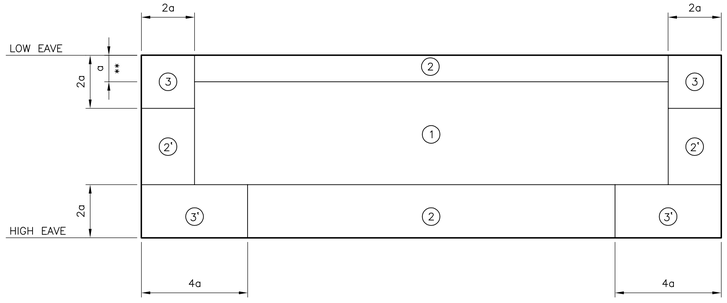

** a = 3 FT

ROOF COMPONENT WIND PRESSURE KEY PLAN

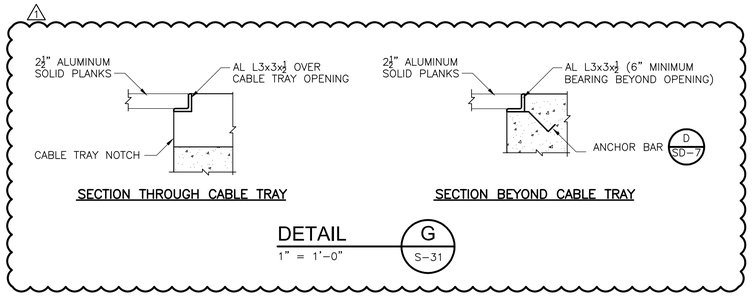

DETAIL G — 1" = 1'-0" — S-31

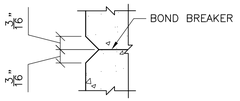

DETAIL E — 2" = 1'-0" — —

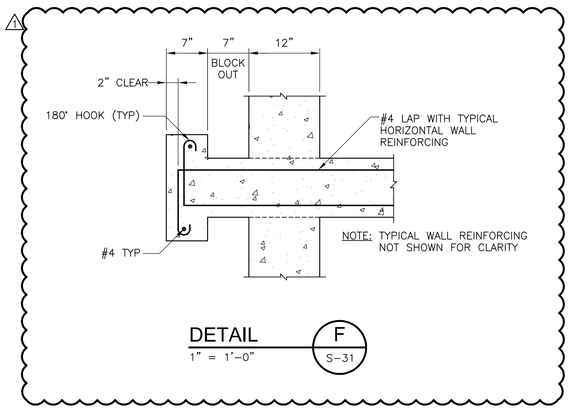

DETAIL F — 1" = 1'-0" — S-31

REV. NO.	DATE	DRWN	CHKD	REMARKS
1	12/17	PCS	JSB	ADDENDUM NO. 12

DESIGNED BY: J. BOGGS
DRAWN BY: P. DOUGLAS
SHEET CHK'D BY: T. VERWEY
CROSS CHK'D BY: C. CARDEN
APPROVED BY: J. BOGGS
DATE: AUGUST 2017

CDM Smith
Parkview Towers
210 25th Avenue North, Suite 1102
Nashville, TN 37203
Tel: (615) 320-3161

CITY OF FRANKLIN, TENNESSEE
FRANKLIN WRF
MODIFICATIONS AND EXPANSION PROJECT
COF CONTRACT NO. 2015-0163

UV STRUCTURE DETAILS

PROJECT NO 14915-96594-WRF
FILE NAME: S033UVPL.DWG
SHEET NO.
S-33

ISSUED FOR BID

XREFs: [CDMS_2436, XSUVBS00] Images: []
Last saved by: SCHIAVOPC Time: 12/21/2017 3:24:03 PM
pw:\\pw.cdmsmith.com:PW_PL1\14915\96594\04 Design Services NM_Bid\04 Structural\10 CADD\S033UVPL.dwg
©2017 CDM SMITH ALL RIGHTS RESERVED.
REUSE OF DOCUMENTS: THESE DOCUMENTS AND DESIGNS PROVIDED BY PROFESSIONAL SERVICE, INCORPORATED HEREIN, ARE THE PROPERTY OF CDM SMITH AND ARE NOT TO BE USED, IN WHOLE OR PART, FOR ANY OTHER PROJECT WITHOUT THE WRITTEN AUTHORIZATION OF CDM SMITH.

XREFs: [CDMS_2436, XSDBBS00, SWP0058B, SWP003PR] Images: []
Last saved by: SCHIAVOPC Time: 12/21/2017 10:42:30 AM
pw:\\pw.cdmsmith.com:PW_PL1\14915\96594\04 Design Services NM_Bid\04 Structural\10 CADD\S059DBPL.dwg
© 2017 CDM SMITH ALL RIGHTS RESERVED.
REUSE OF DOCUMENTS: THESE DOCUMENTS AND DESIGNS PROVIDED BY PROFESSIONAL SERVICE, INCORPORATED HEREIN, ARE THE PROPERTY OF CDM SMITH AND ARE NOT TO BE USED, IN WHOLE OR PART, FOR ANY OTHER PROJECT WITHOUT THE WRITTEN AUTHORIZATION OF CDM SMITH.

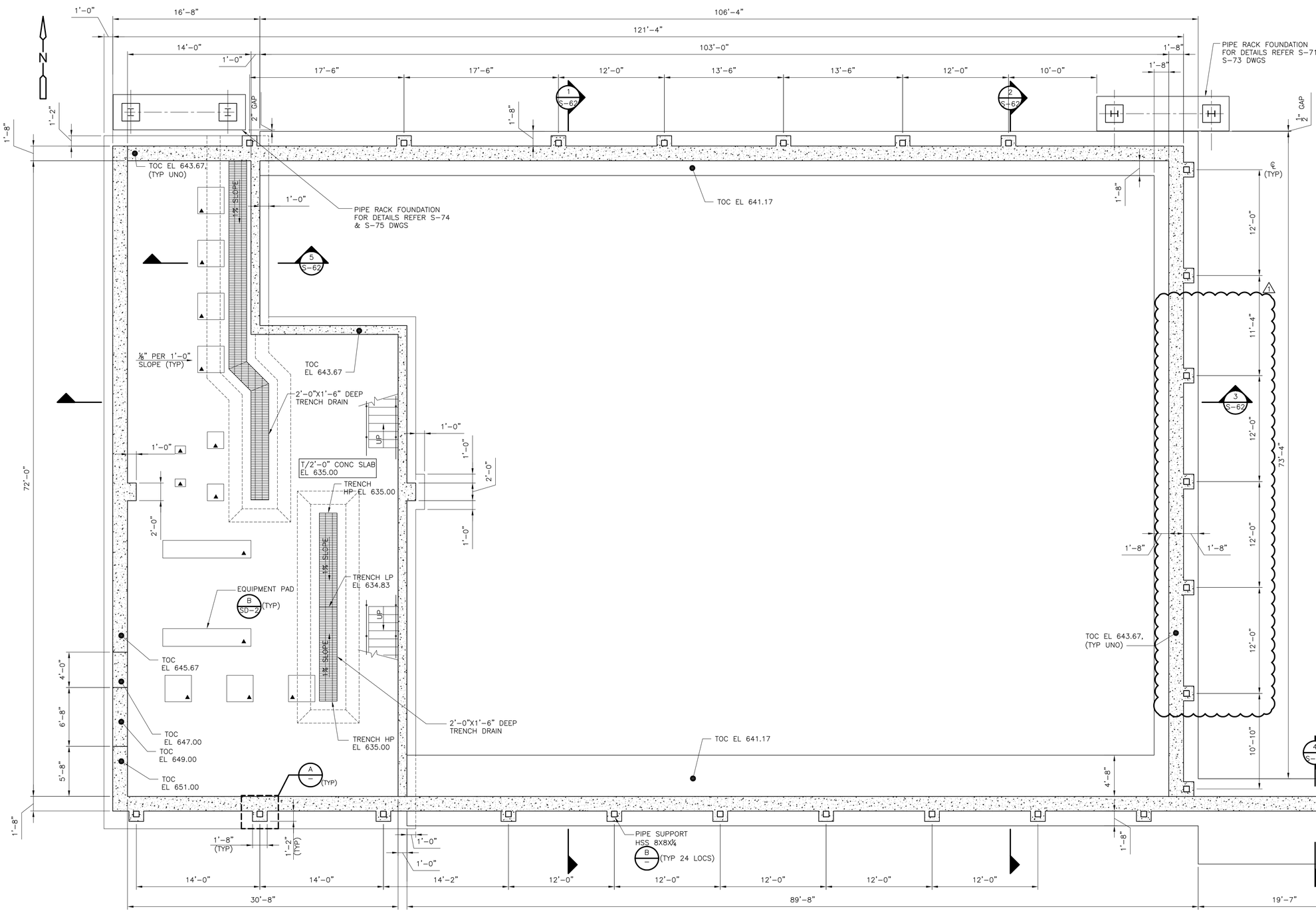

FOUNDATION
PLAN
3/16" = 1'-0"

NOTES:

1. FOR GENERAL NOTES, SEE S-1 DRAWING.
2. ▲ INDICATES EQUIPMENT PAD.
3. ▢ INDICATES FLOOR DRAIN.
4. ALL CARBON STEEL SHALL BE SHOP-PRIMED AND EPOXY COATED IN ACCORDANCE WITH DIVISION 9 SPECIFICATIONS.

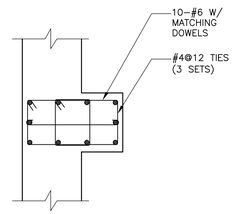

NOTE:

1. WALL REINF NOT SHOWN FOR CLARITY

TYPICAL PILASTER DETAIL
DETAIL A
1/2" = 1'-0"

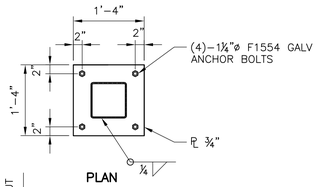

PLAN

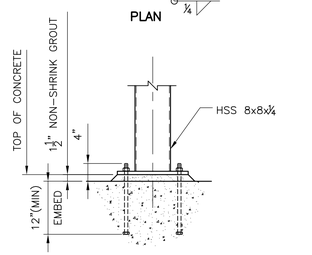

SECTION

PIPE SUPPORT BASE PLATE
DETAIL B
3/4" = 1'-0"

JUSTIN S. BOGGS
REGISTERED ENGINEER
AGRICULTURE
COMMERCE
NO. 118060
STATE OF TENNESSEE
12/21/17

REV. NO.	DATE	DRWN	CHKD	REMARKS
1	12/17	PCS	JSB	ADDENDUM NO. 12

DESIGNED BY: E. GOPINATH
DRAWN BY: P. BALAKRISHNAN
SHEET CHK'D BY: T. VERWEY
CROSS CHK'D BY: T. NANGLE
APPROVED BY: J. BOGGS
DATE: AUGUST 2017

CDM Smith
Parkview Towers
210 25th Avenue North, Suite 1102
Nashville, TN 37203
Tel: (615) 320-3161

CITY OF FRANKLIN, TENNESSEE
FRANKLIN WRF
MODIFICATIONS AND EXPANSION PROJECT
COF CONTRACT NO. 2015-0163

DIGESTER BUILDING
FOUNDATION PLAN

PROJECT NO 14915-96594-WRF
FILE NAME: S059DBPL.DWG
SHEET NO.
S-59

ISSUED FOR BID

XREFs: [CDMS_2436, XSDBBS01, SWP0048B, SWP001PR] Images: []
Last saved by: SCHAVOPC Time: 12/21/2017 2:04:57 PM
pw:\\pw.cdmsmith.com:PW_PL1\14915\96594\04 Design Services NM_Bid\04 Structural\10 CADD\S060DBPL.dwg
©2017 CDM SMITH ALL RIGHTS RESERVED.
REUSE OF DOCUMENTS: THESE DOCUMENTS AND DESIGNS PROVIDED BY PROFESSIONAL SERVICE, INCORPORATED HEREIN, ARE THE PROPERTY OF CDM SMITH AND ARE NOT TO BE USED, IN WHOLE OR PART, FOR ANY OTHER PROJECT WITHOUT THE WRITTEN AUTHORIZATION OF CDM SMITH.

NOTES:

1. FOR GENERAL NOTES, SEE S-1 DRAWING.
2. ▲ INDICATES EQUIPMENT PAD.
3. ■ INDICATES HOUSEKEEPING PAD.
4. □ INDICATES FLOOR DRAIN.

PIPE RACK FRAMING FOR DETAILS REFER S-74 & S-75 DWGS

PIPE RACK FRAMING FOR DETAILS REFER S-71 TO S-73 DWGS

CONCRETE PAVEMENT SEE "C" DRAWINGS

T/10" CONC SLAB EL 643.00

T/2'-0" CONC SLAB EL 635.00

T/10" CONC SLAB EL 650.00

EQUIPMENT PAD

HOUSEKEEPING PAD (TYP 8 LOCS)

AL GUARDRAIL

CAGE LADDER

2'-0"x2'-0" CMU PILASTER (TYP 3 LOCS)

12 EQUAL RISERS =11'-0"

HSS 8X8 (TYP, 24 LOCS)

8" ALL ROUND (TYP)

ALUMINUM GRATING (TYP)

FLOOR PLAN
3/16" = 1'-0"

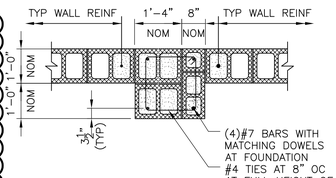

24"x24" CMU PILASTER DETAIL

DETAIL A
1/2" = 1'-0"

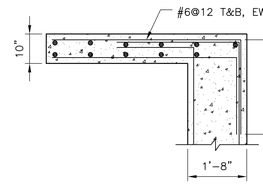

SECTION 1
1/2" = 1'-0"

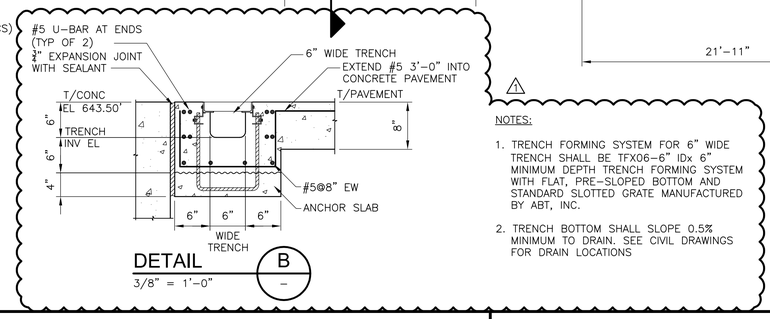

DETAIL B
3/8" = 1'-0"

NOTES:

1. TRENCH FORMING SYSTEM FOR 6" WIDE TRENCH SHALL BE TFX06-6" IDx 6" MINIMUM DEPTH TRENCH FORMING SYSTEM WITH FLAT, PRE-SLOPED BOTTOM AND STANDARD SLOTTED GRATE MANUFACTURED BY ABT, INC.
2. TRENCH BOTTOM SHALL SLOPE 0.5% MINIMUM TO DRAIN. SEE CIVIL DRAWINGS FOR DRAIN LOCATIONS

DESIGN LOAD DATA – DIGESTER BUILDING

WIND:	
INTERNAL PRESSURE COEFFICIENT	+/– 0.55
SEISMIC:	
BASIC SEISMIC FORCE RESISTING SYSTEM:	SPECIAL REINFORCED MASONRY SHEAR WALLS
SEISMIC RESPONSE COEFFICIENT,	Cs : 0.078
RESPONSE MODIFICATION FACTOR, R:	5.0
ANALYSIS PROCEDURE USED:	EQUIVALENT LATERAL FORCE PROCEDURE
DESIGN BASE SHEAR:	Cs x W
ALLOWABLE BEARING PRESSURE:	2000 PSF

REFER TO SHEET S-1 FOR DESIGN LOAD DATA THAT IS THE SAME FOR ALL STRUCTURES.

REV. NO.	DATE	DRWN	CHKD	REMARKS
1	12/17	PCS	JSB	ADDENDUM NO. 12

DESIGNED BY: E. GOPINATH
DRAWN BY: P. BALAKRISHNAN
SHEET CHK'D BY: T. VERWEY
CROSS CHK'D BY: T. NANGLE
APPROVED BY: J. BOGGS
DATE: AUGUST 2017

CDM Smith
Parkview Towers
210 25th Avenue North, Suite 1102
Nashville, TN 37203
Tel: (615) 320-3161

CITY OF FRANKLIN, TENNESSEE
FRANKLIN WRF
MODIFICATIONS AND EXPANSION PROJECT
COF CONTRACT NO. 2015-0163

DIGESTER BUILDING
FLOOR PLAN

PROJECT NO 14915-96594-WRF
FILE NAME: S060DBPL.DWG
SHEET NO.
S-60

JUSTIN S. BOGGS — REGISTERED ENGINEER — AGRICULTURE — COMMERCE — NO. 119080 — STATE OF TENNESSEE

ISSUED FOR BID

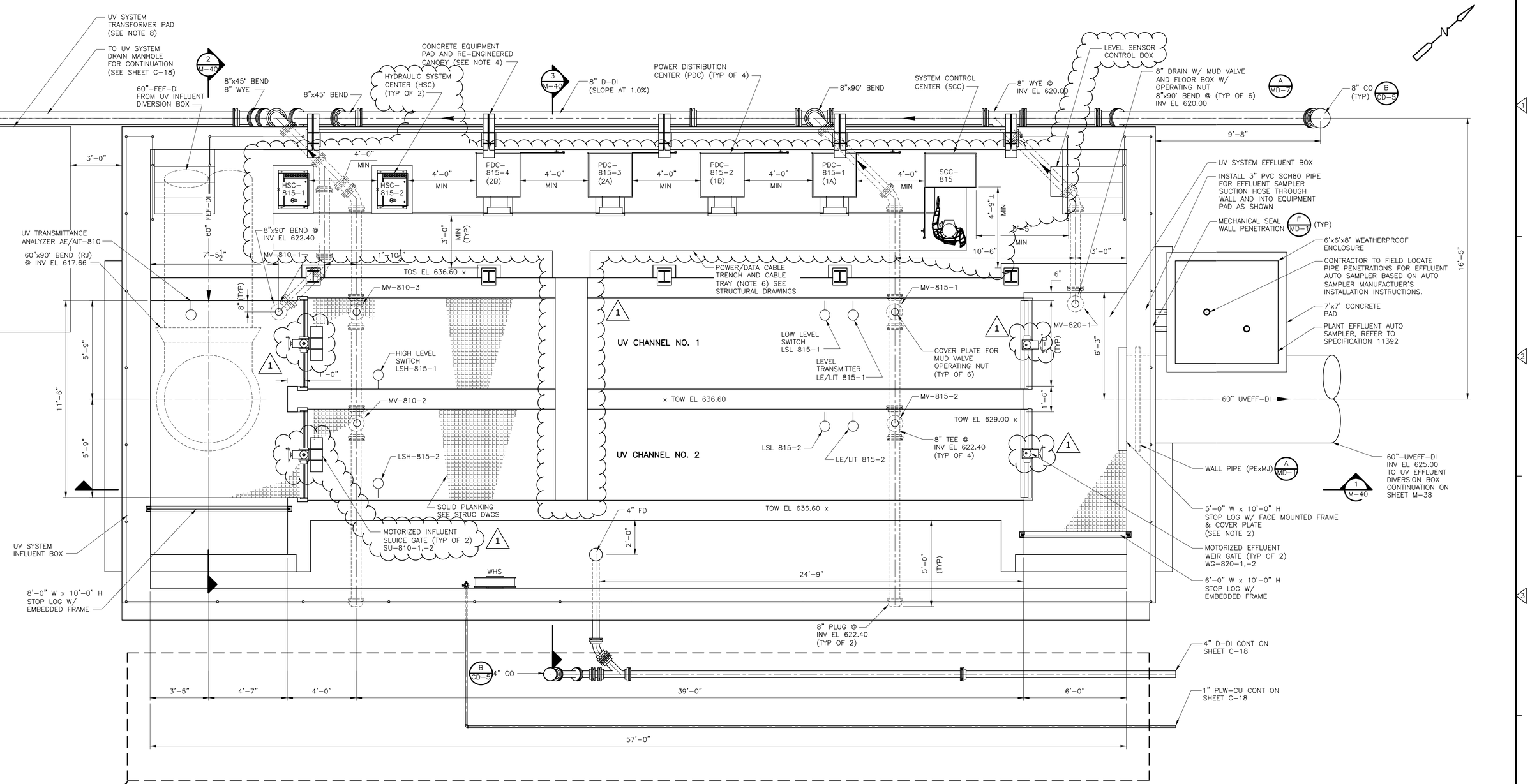

PLAN

3/8" = 1'-0"

NOTES:

1. UV DISINFECTION SYSTEM DESIGN IS BASED ON THE PRE-SELECTED SYSTEM SPECIFIED IN SECTION 11265.
2. REFER TO SPECIFICATION SECTION 01014 REGARDING USE OF STOP LOGS AND STOP PLATES DURING STARTUP AND TESTING.
3. UV FACILITY SLIDE GATES, WEIR GATES, ACTUATORS, UVT ANALYZER, LEVEL SWITCHES, AND ULTRASONIC LEVEL TRANSMITTERS ARE TO BE PROVIDED BY THE UV MANUFACTURER AND SHALL BE INSTALLED AND TESTED BY THE CONTRACTOR.
4. PRE-ENGINEERED CANOPY NOT SHOWN FOR CLARITY. SEE SHEET S-32.
5. ALL PIPES BENEATH STRUCTURES SHALL BE CONCRETE ENCASED. SEE STRUCTURAL DETAILS.
6. CABLE TRAY TO BE SUPPLIED AND INSTALLED BY CONTRACTOR IN ACCORDANCE WITH UV MANUFACTURER'S RECOMMENDATION. DIMENSIONS OF POWER/DATA CABLE TRENCH TO BE VERIFIED BY UV MANUFACTURER.
7. THE RESPONSIBILITIES OF THE INSTALLATION CONTRACTOR FOR THE UV SYSTEM ARE INCLUDED IN APPENDIX A TO SPECIFICATION SECTION 11265.
8. TRANSFORMERS TO BE SUPPLIED BY UV MANUFACTURER. FOR CONTINUATION, REFER TO SHEETS C-18 AND E-69.
9. INSULATE AND HEAT TRACE ALL OUTDOOR EXPOSED PROCESS PIPING AND PLANT WATER PIPING 8-INCHES AND SMALLER. REFER TO SPECIFICATION SECTIONS 15250 AND 15257.

CAROLINE DAWN CARDEN REGISTERED ENGINEER AGRICULTURE 12/21/17 COMMERCE NO. 117376 STATE OF TENNESSEE

REV. NO.	DATE	DRWN	CHKD	REMARKS
1	12/17	BTP	CDC	ADDENDUM NO. 12

DESIGNED BY: C. CARDEN
DRAWN BY: M. BANDA
SHEET CHK'D BY: B. LEE
CROSS CHK'D BY: R. HUGUENARD
APPROVED BY: C. CARDEN
DATE: AUGUST 2017

CDM Smith
Parkview Towers
210 25th Avenue North, Suite 1102
Nashville, TN 37203
Tel: (615) 320-3161

CITY OF FRANKLIN, TENNESSEE
FRANKLIN WRF
MODIFICATIONS AND EXPANSION PROJECT
COF CONTRACT NO. 2015-0163

NEW UV DISINFECTION SYSTEM PLAN

PROJECT NO 14915-96594-WRF
FILE NAME: M039UVPL.DWG
SHEET NO.
M-39

ISSUED FOR BID

XREFs: [ZMUVBS00, ZSUVBS00, CDMS_2436] Images: []
Last saved by: CLAYTONDD Time: 12/21/2017 1:04:49 PM
pw:\\pw.cdmsmith.com:PW_PL1\14915\96594\04 Design Services NM_Bid\05 Process Mechanical\10 CADD\M039UVPL.dwg
©2017 CDM SMITH ALL RIGHTS RESERVED.
REUSE OF DOCUMENTS: THESE DOCUMENTS AND DESIGNS PROVIDED BY PROFESSIONAL SERVICE, INCORPORATED HEREIN, ARE THE PROPERTY OF CDM SMITH AND ARE NOT TO BE USED, IN WHOLE OR PART, FOR ANY OTHER PROJECT WITHOUT THE WRITTEN AUTHORIZATION OF CDM SMITH.

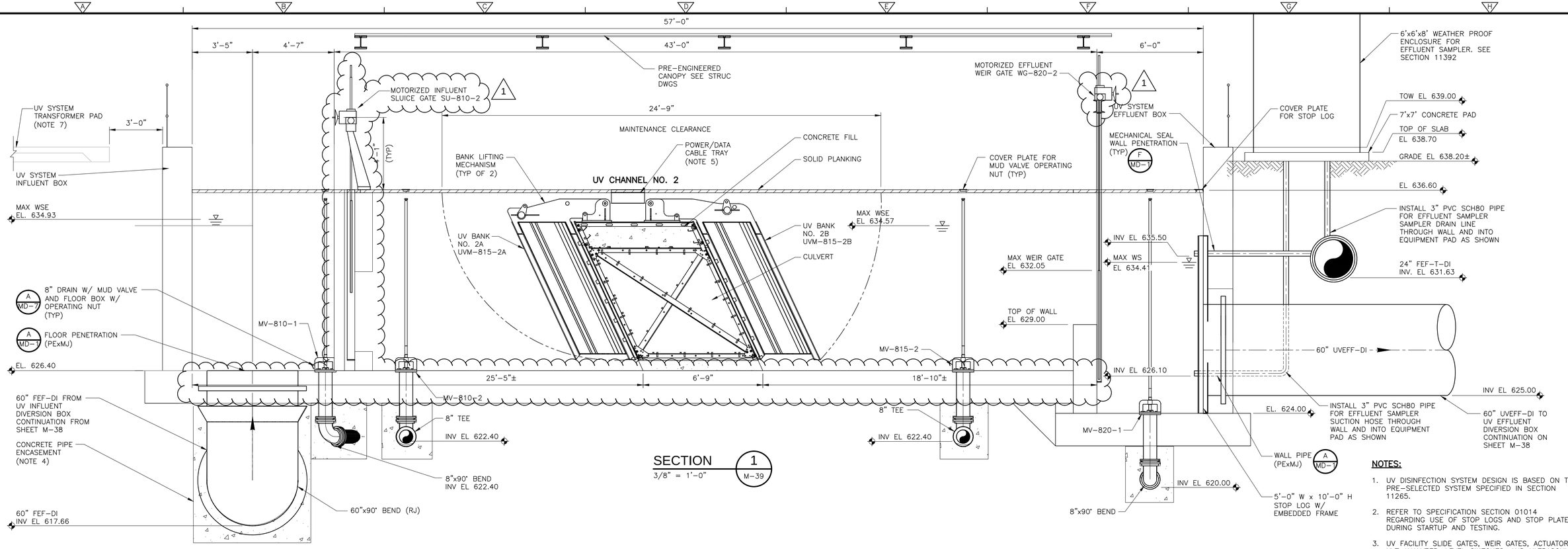

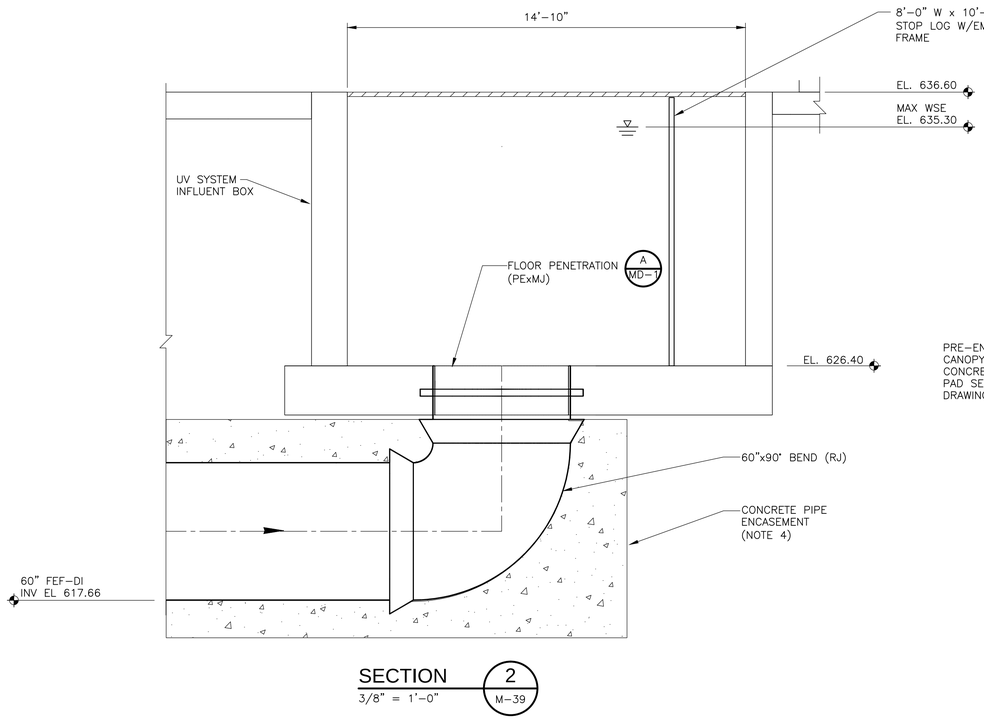

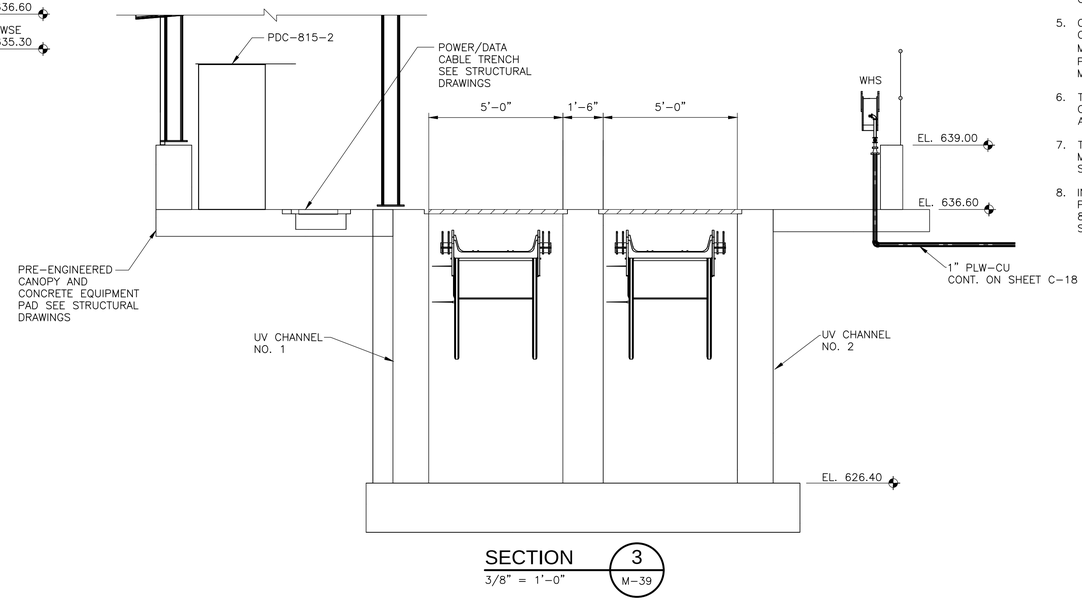

NOTES:

1. UV DISINFECTION SYSTEM DESIGN IS BASED ON THE PRE-SELECTED SYSTEM SPECIFIED IN SECTION 11265.
2. REFER TO SPECIFICATION SECTION 01014 REGARDING USE OF STOP LOGS AND STOP PLATES DURING STARTUP AND TESTING.
3. UV FACILITY SLIDE GATES, WEIR GATES, ACTUATORS, UVT ANALYZER, LEVEL SWITCHES, AND ULTRASONIC LEVEL TRANSMITTERS ARE TO BE PROVIDED BY THE UV MANUFACTURER AND SHALL BE INSTALLED AND TESTED BY THE CONTRACTOR.
4. ALL PIPES BENEATH STRUCTURE SHALL BE CONCRETE ENCASED. SEE STRUCTURAL DETAILS.
5. CABLE TRAY TO BE SUPPLIED & INSTALLED BY CONTRACTOR IN ACCORDANCE WITH UV MANUFACTURER'S RECOMMENDATION. DIMENSIONS OF POWER/DATA CABLE TRENCH TO BE VERIFIED BY UV MANUFACTURER.
6. THE RESPONSIBILITIES OF THE INSTALLATION CONTRACTOR FOR THE UV SYSTEM ARE INCLUDED IN APPENDIX A TO SPECIFICATION SECTION 11265.
7. TRANSFORMERS TO BE SUPPLIED BY UV MANUFACTURER. FOR CONTINUATION, REFER TO SHEETS C-18 AND E-69.
8. INSULATE AND HEAT TRACE ALL OUTDOOR EXPOSED PROCESS PIPING AND PLANT WATER PIPING 8-INCHES AND SMALLER. REFER TO SPECIFICATION SECTIONS 15250 AND 15257.

XREFs: [ZSUVBS00, ZMUVBS00, CDMS_2436] Images: []
Last saved by: BANDAAM Time: 8/15/2017 9:15:48 AM
pw:\\pw.cdmsmith.com:PW_PL1\14915\96594\04 Design Services NM_Bid\05 Process Mechanical\10 CADD\M040UVSC.dwg
© 2017 CDM SMITH ALL RIGHTS RESERVED.
REUSE OF DOCUMENTS: THESE DOCUMENTS AND DESIGNS PROVIDED BY PROFESSIONAL SERVICE, INCORPORATED HEREIN, ARE THE PROPERTY OF CDM SMITH AND ARE NOT TO BE USED, IN WHOLE OR PART, FOR ANY OTHER PROJECT WITHOUT THE WRITTEN AUTHORIZATION OF CDM SMITH.

REV. NO.	DATE	DRWN	CHKD	REMARKS
1	12/17	BTP	CDC	ADDENDUM NO. 12

DESIGNED BY: C. CARDEN
DRAWN BY: T. KAY
SHEET CHK'D BY: B. LEE
CROSS CHK'D BY: R. HUGUENARD
APPROVED BY: C. CARDEN
DATE: AUGUST 2017

CDM Smith
Parkview Towers
210 25th Avenue North, Suite 1102
Nashville, TN 37203
Tel: (615) 320-3161

CITY OF FRANKLIN, TENNESSEE
FRANKLIN WRF
MODIFICATIONS AND EXPANSION PROJECT
COF CONTRACT NO. 2015-0163

NEW UV DISINFECTION SYSTEM SECTIONS

PROJECT NO 14915-96594-WRF
FILE NAME: M040UVSC.DWG

SHEET NO.
M-40

ISSUED FOR BID

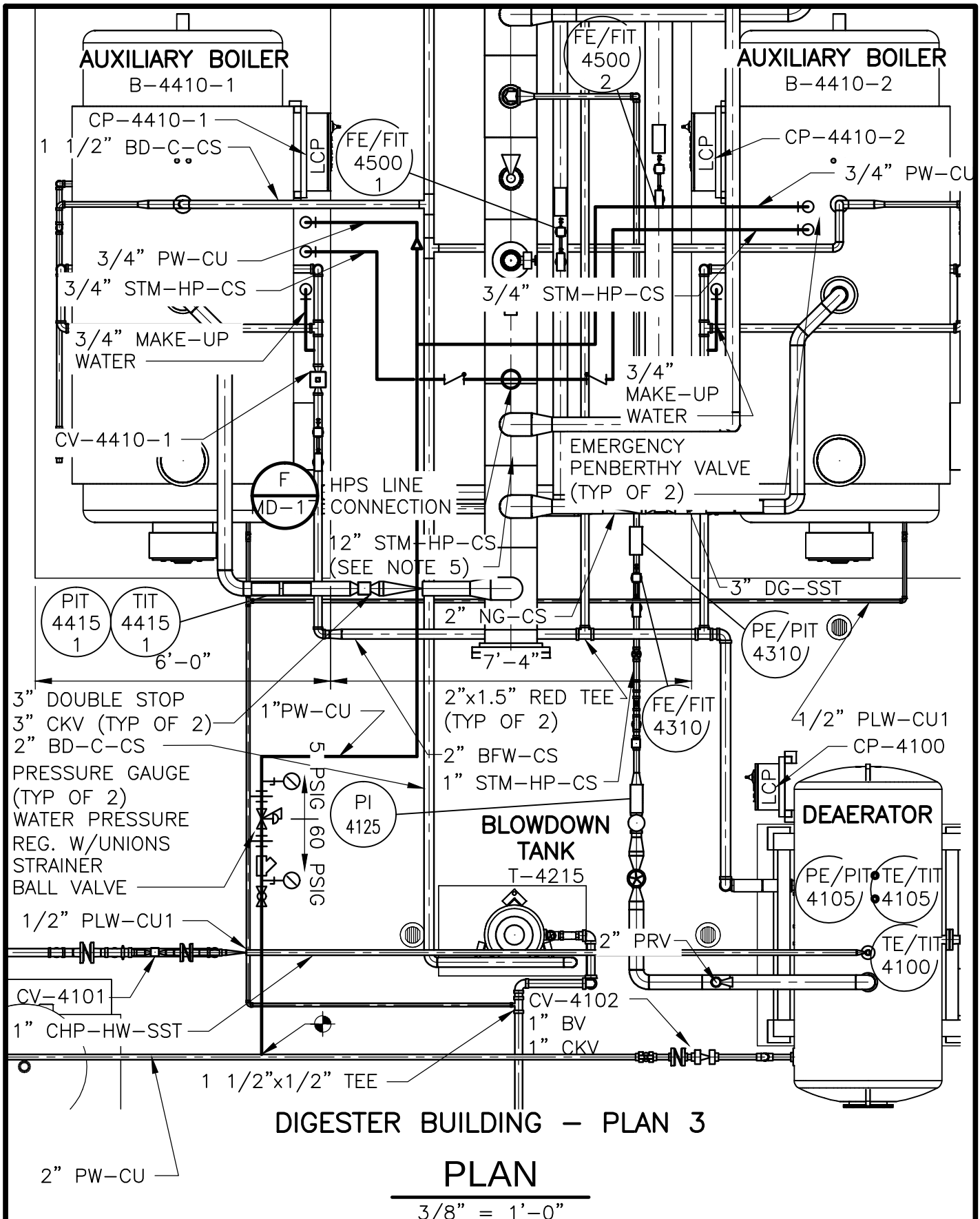

DIGESTER BUILDING – PLAN 3

PLAN

3/8" = 1'-0"

CDM Smith	DATE DEC. 2017		SHEET NO.	LOCATION	ADDENDUM NO.	FIGURE NO.
			M-79	B-2	12	SK-M79-1

XREFs: [CDMS_2436, MWZ000DB, ZADB000, ZSDBBS00, MWZ001DB, MWZ002DB, ZPDB0000, EWZ000DB, CDMS_8511] Images: []
Last saved by: EDWARDSAF Time: 12/22/2017 9:50:23 AM
pw:\\pw.cdmsmith.com:PW_PL\1149151\96594\04 Design Services NM_Bid\05 Process Mechanical\10 CADD\M079DBPL.dwg
© 2012 CDM SMITH ALL RIGHTS RESERVED. REUSE OF DOCUMENTS: THESE DOCUMENTS AND DESIGNS PROVIDED BY PROFESSIONAL SERVICE, INCORPORATED HEREIN, ARE THE PROPERTY OF CDM SMITH AND ARE NOT TO BE USED, IN WHOLE OR PART, FOR ANY OTHER PROJECT WITHOUT THE WRITTEN AUTHORIZATION OF CDM SMITH.

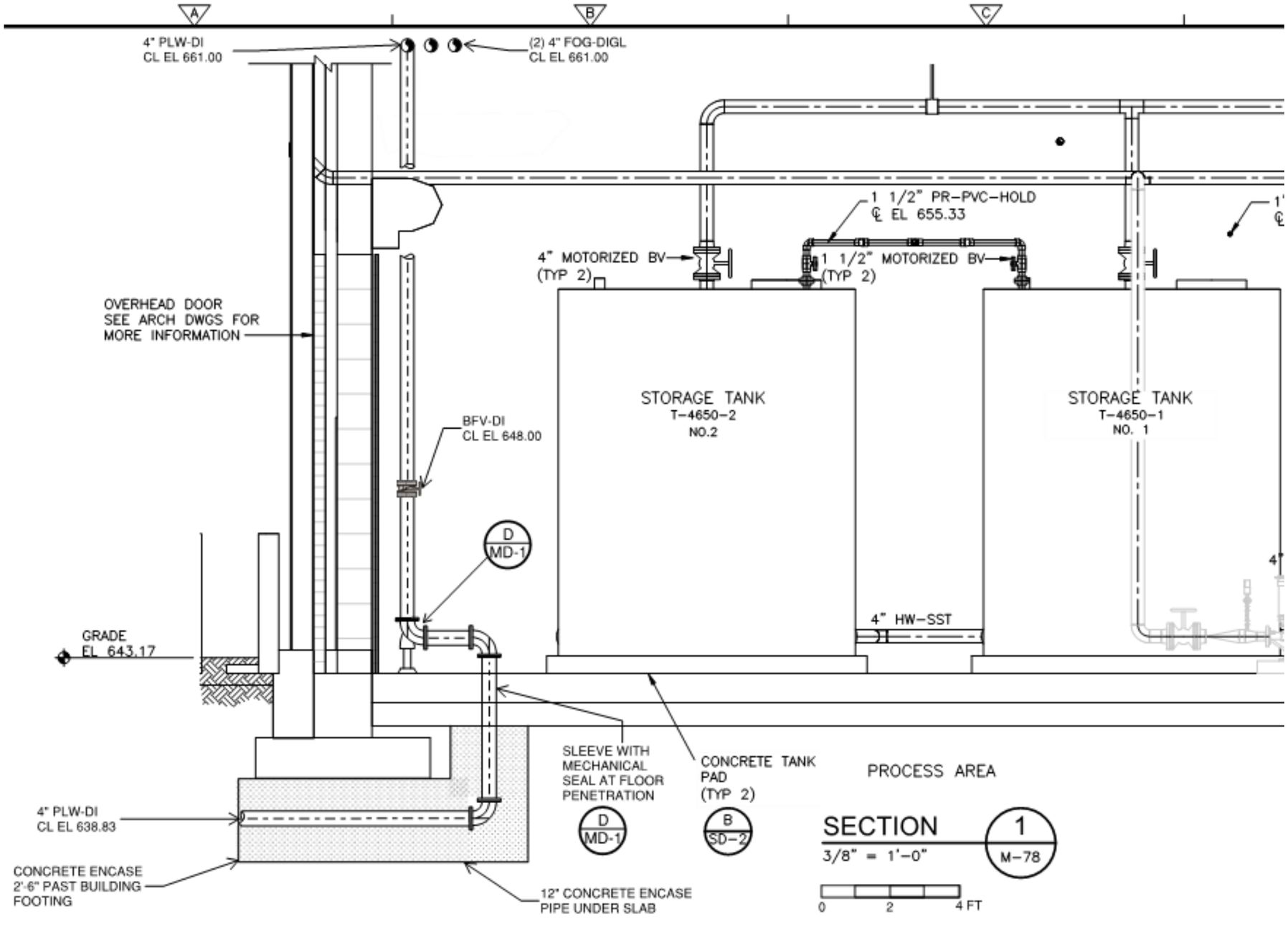

CDM Smith

DATE	SHEET NO.	LOCATION	ADDENDUM NO.	FIGURE NO.
DEC. 2017	M-82	A-1	12	SK-M82-1

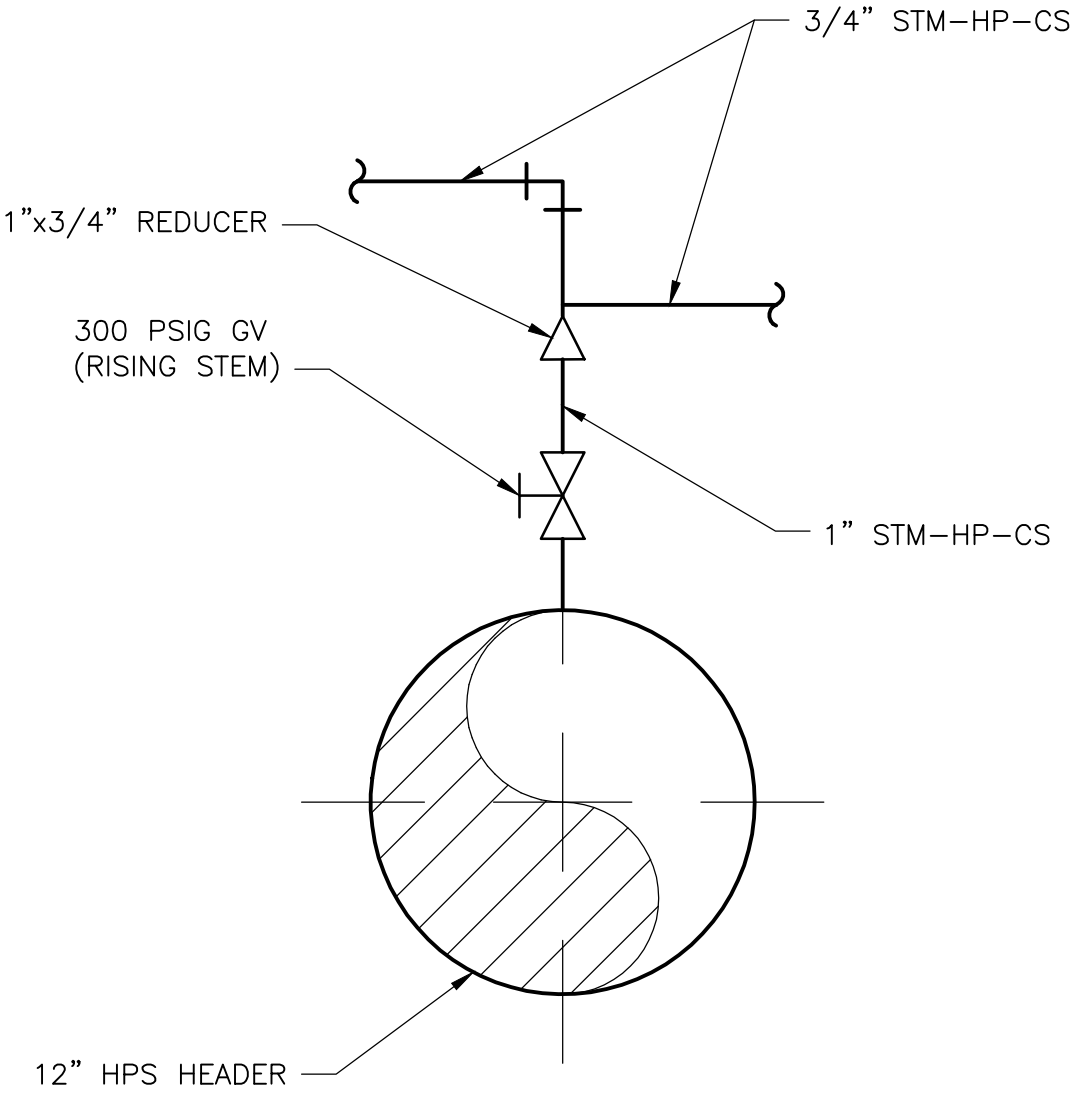

HPS LINE CONNECTION

DETAIL F

NOT TO SCALE

CDM Smith	DATE DEC. 2017	SHEET NO.	LOCATION	ADDENDUM NO.	FIGURE NO.
		MD-17	F-3	12	SK-MD17-2

XREFs: [CDMS_8511] Images: []
Last saved by: EDWARDSAF Time: 12/22/2017 7:46:56 AM
pw:\\pw.cdmsmith.com:PW_PL1\1149151\96594\04 Design Services NM_Bid\05 Process Mechanical\10 CADD\SK-MD17-2.dwg
© 2012 CDM SMITH ALL RIGHTS RESERVED. REUSE OF DOCUMENTS: THESE DOCUMENTS AND DESIGNS PROVIDED BY PROFESSIONAL SERVICE, INCORPORATED HEREIN, ARE THE PROPERTY OF CDM SMITH AND ARE NOT TO BE USED, IN WHOLE OR PART, FOR ANY OTHER PROJECT WITHOUT THE WRITTEN AUTHORIZATION OF CDM SMITH.

NOTES:

1. CONDUIT, WIRING, TRAY CABLE AND CABLE TRAY BY UV SYSTEM SUPPLIER.
2. THE RESPONSIBILITIES OF THE INSTALLATION CONTRACTOR FOR THE UV SYSTEM ARE INCLUDED IN APPENDIX B OF THE SPECIFICATIONS.

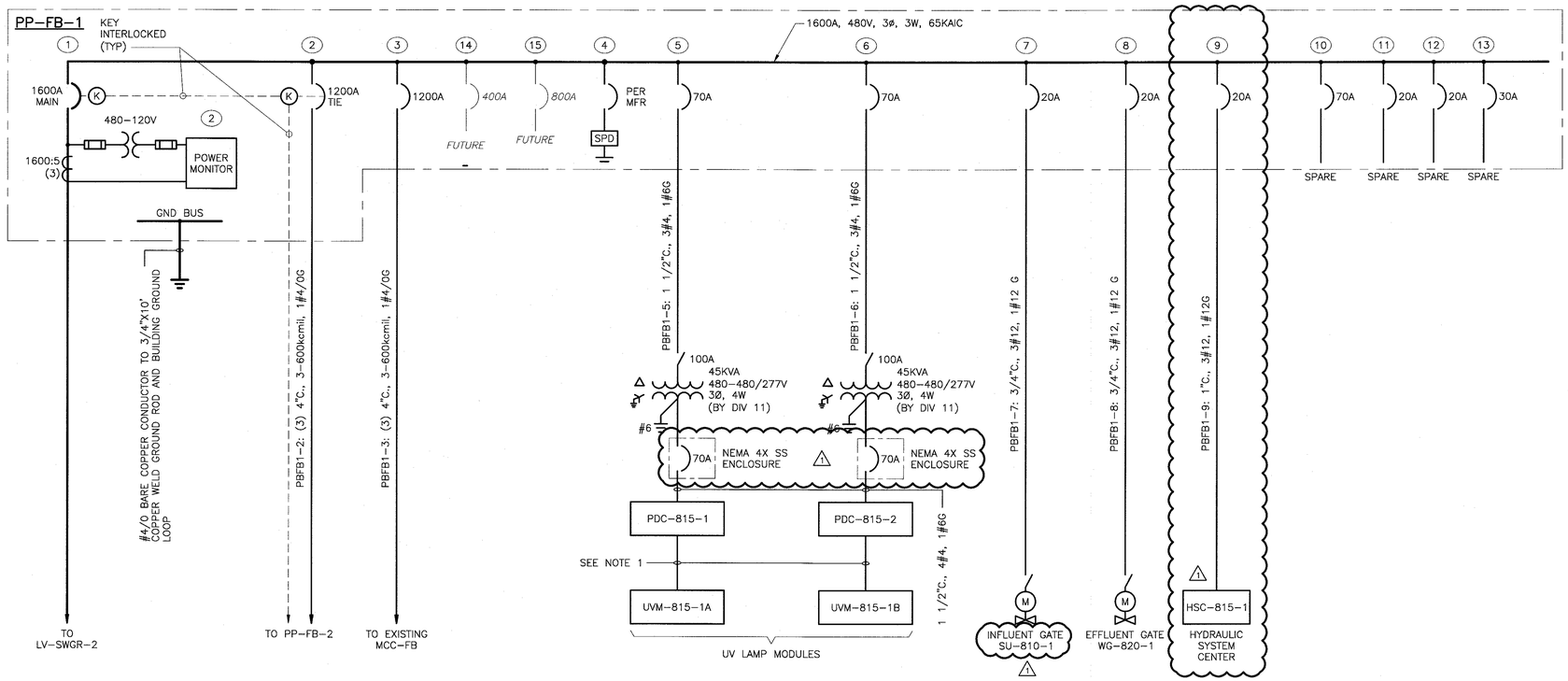

PP-FB-1

ONE LINE POWER DIAGRAM

SPENCER J. PERRY, JR. REGISTERED ENGINEER AGRICULTURE COMMERCE NO. 115135 STATE OF TENNESSEE 12-21-17

REV. NO.	DATE	DRWN	CHKD	REMARKS
1	12/17	RHC	JMS	ADDENDUM NO. 12

DESIGNED BY: P. COUSINS
DRAWN BY: T. KITE
SHEET CHK'D BY: J. SANCHEZ
CROSS CHK'D BY: R. HUGUENARD
APPROVED BY: S. PERRY
DATE: AUGUST 2017

CDM Smith
Parkview Towers
210 25th Avenue North, Suite 1102
Nashville, TN 37203
Tel: (615) 320-3161

CITY OF FRANKLIN, TENNESSEE
FRANKLIN WRF
MODIFICATIONS AND EXPANSION PROJECT
COF CONTRACT NO. 2015-0163

PP-FB-1
ONE LINE POWER DIAGRAM

PROJECT NO 14915-96594-WRF
FILE NAME: E038GEOL.DWG
SHEET NO.
E-38

ISSUED FOR BID

XREFs: [CDMS_2436] Images: []
Last saved by: RUCKRM Time: 12/21/2017 3:02:44 PM
pw:\\pw.cdmsmith.com:PW_PL1\14915\96594\04 Design Services NNL_Bid\09 Electrical\10 CADD\E038GEOL.dwg
© 2017 CDM SMITH ALL RIGHTS RESERVED.
REUSE OF DOCUMENTS: THESE DOCUMENTS AND DESIGNS PROVIDED BY PROFESSIONAL SERVICE, INCORPORATED HEREIN, ARE THE PROPERTY OF CDM SMITH AND ARE NOT TO BE USED, IN WHOLE OR PART, FOR ANY OTHER PROJECT WITHOUT THE WRITTEN AUTHORIZATION OF CDM SMITH.

© 2017 CDM SMITH ALL RIGHTS RESERVED.
REUSE OF DOCUMENTS: THESE DOCUMENTS AND DESIGNS PROVIDED BY PROFESSIONAL SERVICE, INCORPORATED HEREIN, ARE THE PROPERTY OF CDM SMITH AND ARE NOT TO BE USED, IN WHOLE OR PART, FOR ANY OTHER PROJECT WITHOUT THE WRITTEN AUTHORIZATION OF CDM SMITH.

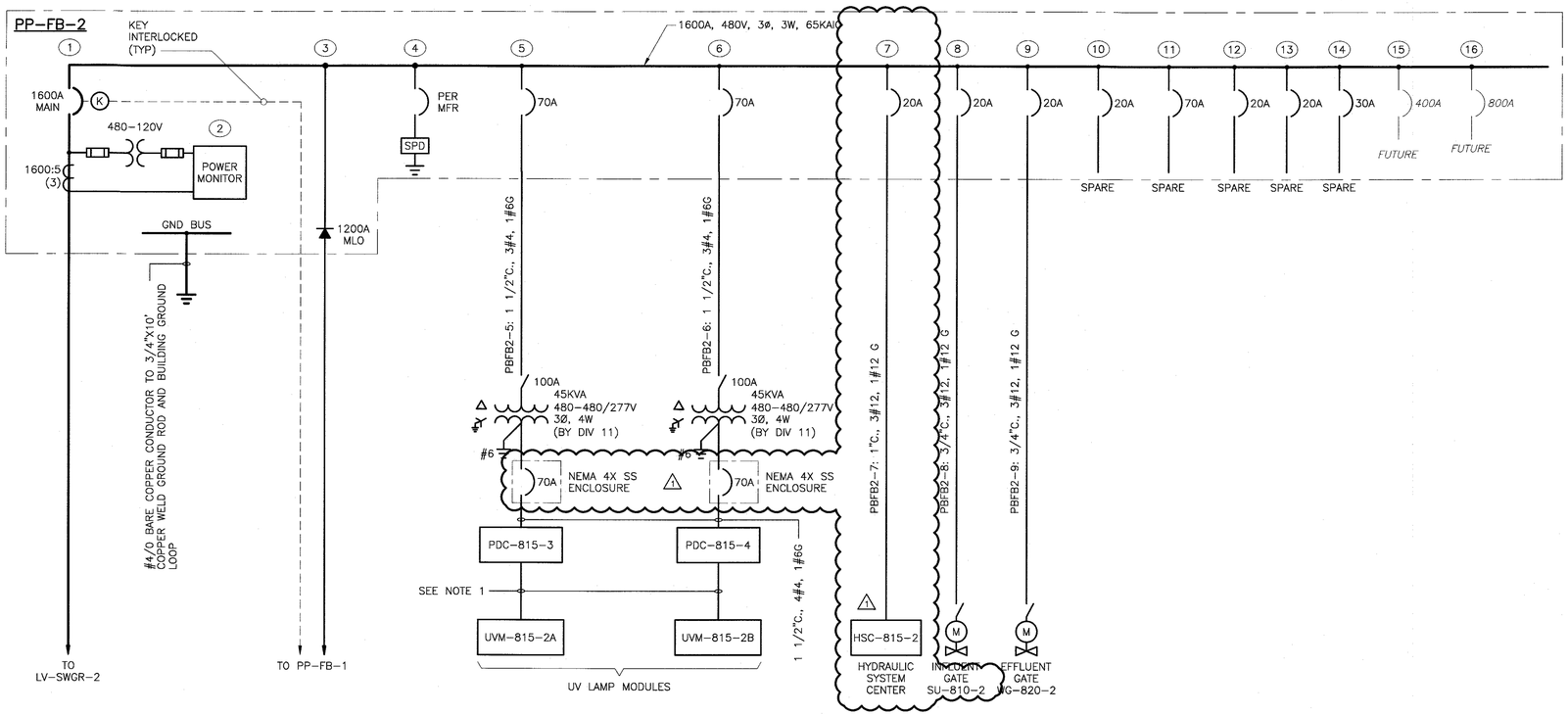

PB-FB-2

ONE LINE POWER DIAGRAM

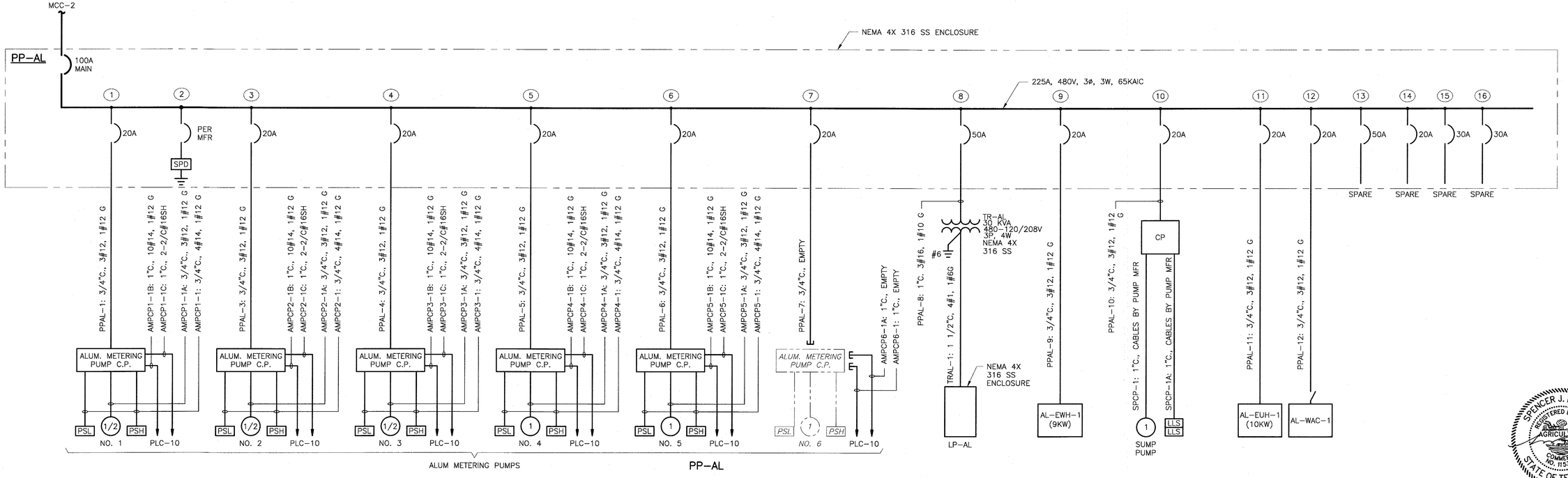

ONE LINE POWER DIAGRAM

NOTES:

1. CONDUIT, WIRING, TRAY CABLE, AND CABLE TRAY BY UV SYSTEM SUPPLIER.
2. THE RESPONSIBILITIES OF THE INSTALLATION CONTRACTOR FOR THE UV SYSTEM ARE INCLUDED IN APPENDIX B OF THE SPECIFICATIONS.

SPENCER J. PERRY JR. REGISTERED ENGINEER AGRICULTURE COMMERCE NO. 115330 STATE OF TENNESSEE 12-21-17

REV. NO.	DATE	DRWN	CHKD	REMARKS
1	12/17	RHC	JMS	ADDENDUM NO. 12

DESIGNED BY: P. COUSINS
DRAWN BY: T. KITE
SHEET CHK'D BY: J. SANCHEZ
CROSS CHK'D BY: R. HUGUENARD
APPROVED BY: S. PERRY
DATE: AUGUST 2017

CDM Smith
Parkview Towers
210 25th Avenue North, Suite 1102
Nashville, TN 37203
Tel: (615) 320-3161

CITY OF FRANKLIN, TENNESSEE
FRANKLIN WRF
MODIFICATIONS AND EXPANSION PROJECT
COF CONTRACT NO. 2015-0163

PP-FB-2 AND PP-AL
ONE LINE POWER DIAGRAM

PROJECT NO 14915-96594-WRF
FILE NAME: E039GEOL.DWG
SHEET NO.
E-39

ISSUED FOR BID

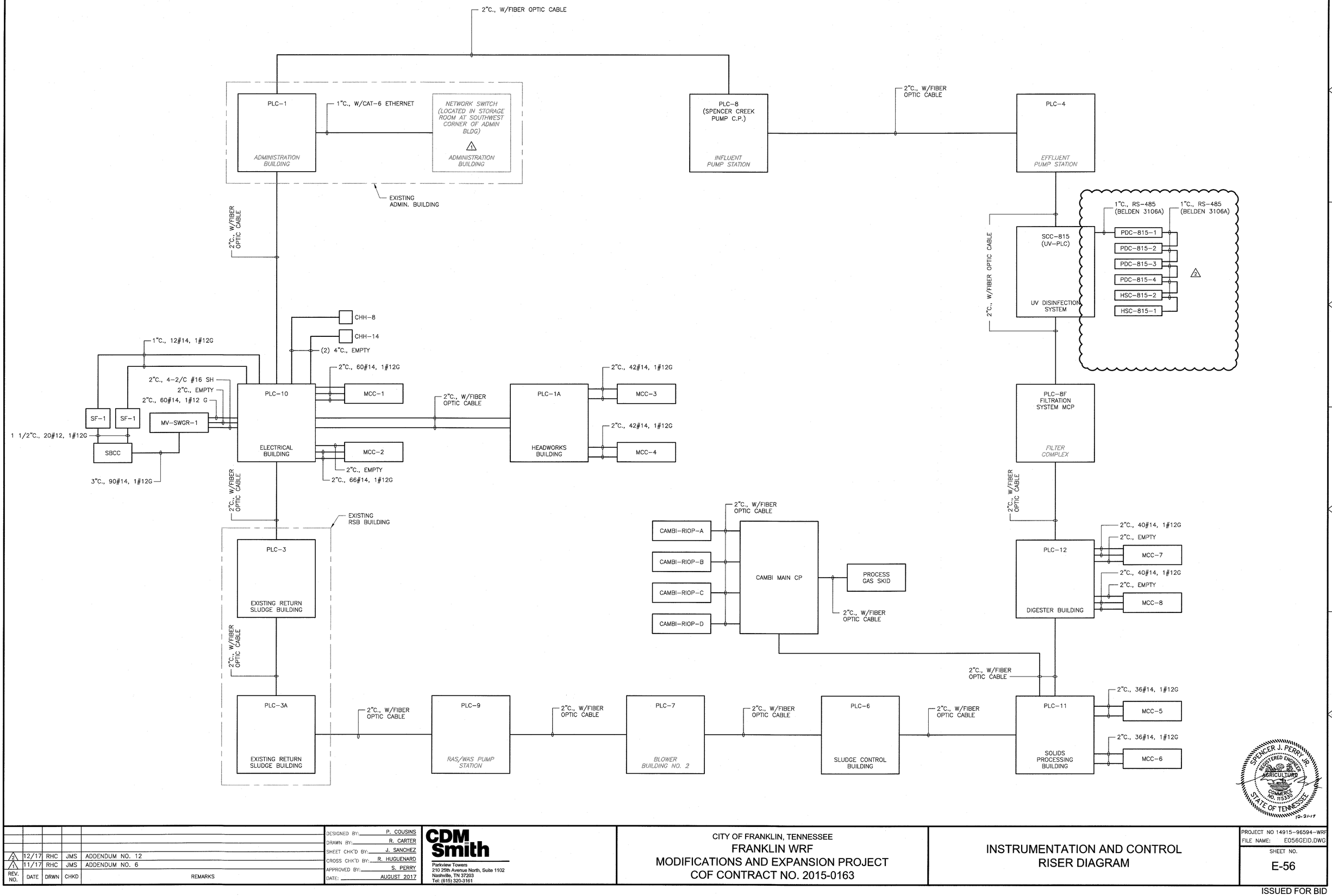

SPENCER J. PERRY, JR. REGISTERED ENGINEER AGRICULTURE COMMERCE NO. 115336 STATE OF TENNESSEE 12-21-17

REV. NO.	DATE	DRWN	CHKD	REMARKS
2	12/17	RHC	JMS	ADDENDUM NO. 12
1	11/17	RHC	JMS	ADDENDUM NO. 6

DESIGNED BY: P. COUSINS
DRAWN BY: R. CARTER
SHEET CHK'D BY: J. SANCHEZ
CROSS CHK'D BY: R. HUGUENARD
APPROVED BY: S. PERRY
DATE: AUGUST 2017

CDM Smith
Parkview Towers
210 25th Avenue North, Suite 1102
Nashville, TN 37203
Tel: (615) 320-3161

CITY OF FRANKLIN, TENNESSEE
FRANKLIN WRF
MODIFICATIONS AND EXPANSION PROJECT
COF CONTRACT NO. 2015-0163

INSTRUMENTATION AND CONTROL RISER DIAGRAM

PROJECT NO 14915-96594-WRF
FILE NAME: E056GEID.DWG
SHEET NO.
E-56

ISSUED FOR BID

XREFs: [CDMS_2436] Images: []
Last saved by: RUCKRM Time: 12/21/2017 3:02:42 PM
pw:\\pw.cdmsmith.com:PW_PL1\14915\96594\04 Design Services NM_Bid\09 Electrical\10 CADD\E038GE0L.dwg
©2017 CDM SMITH ALL RIGHTS RESERVED.
REUSE OF DOCUMENTS: THESE DOCUMENTS AND DESIGNS PROVIDED BY PROFESSIONAL SERVICE, INCORPORATED HEREIN, ARE THE PROPERTY OF CDM SMITH AND ARE NOT TO BE USED, IN WHOLE OR PART, FOR ANY OTHER PROJECT WITHOUT THE WRITTEN AUTHORIZATION OF CDM SMITH.

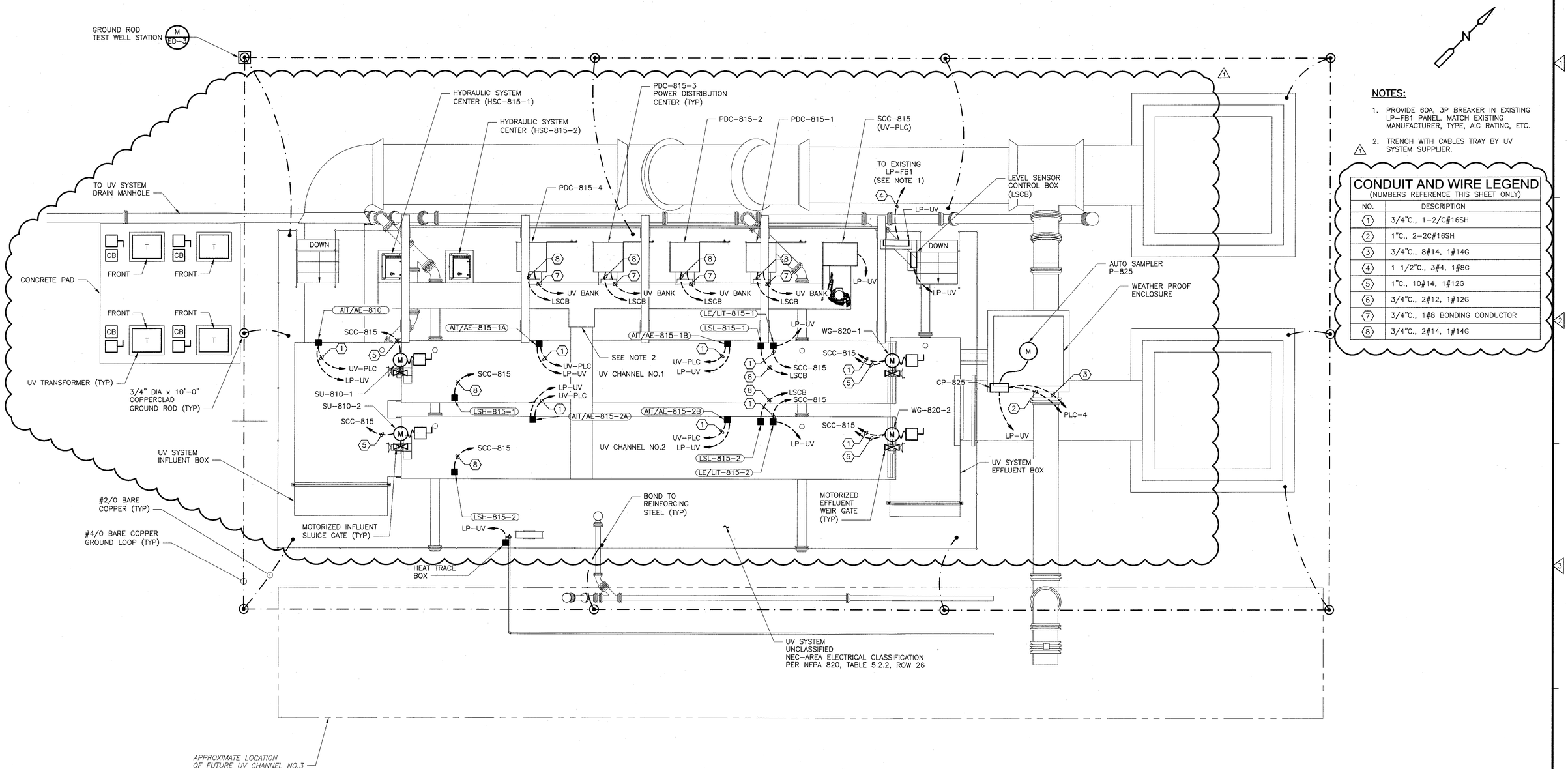

PLAN
1/4" = 1'-0"

NOTES:

1. PROVIDE 60A, 3P BREAKER IN EXISTING LP-FB1 PANEL. MATCH EXISTING MANUFACTURER, TYPE, AIC RATING, ETC.
2. TRENCH WITH CABLES TRAY BY UV SYSTEM SUPPLIER.

CONDUIT AND WIRE LEGEND
(NUMBERS REFERENCE THIS SHEET ONLY)

NO.	DESCRIPTION
1	3/4"C., 1-2/C#16SH
2	1"C., 2-2C#16SH
3	3/4"C., 8#14, 1#14G
4	1 1/2"C., 3#4, 1#8G
5	1"C., 10#14, 1#12G
6	3/4"C., 2#12, 1#12G
7	3/4"C., 1#8 BONDING CONDUCTOR
8	3/4"C., 2#14, 1#14G

SPENCER J. PERRY, JR. REGISTERED ENGINEER STATE OF TENNESSEE AGRICULTURE COMMERCE NO. 115390 12-21-17

REV. NO.	DATE	DRWN	CHKD	REMARKS
1	12/17	RHC	JMS	ADDENDUM NO. 12

DESIGNED BY: P. COUSINS
DRAWN BY: R. CARTER
SHEET CHK'D BY: J. SANCHEZ
CROSS CHK'D BY: R. HUGUENARD
APPROVED BY: S. PERRY
DATE: AUGUST 2017

CDM Smith
Parkview Towers
210 25th Avenue North, Suite 1102
Nashville, TN 37203
Tel: (615) 320-3161

CITY OF FRANKLIN, TENNESSEE
FRANKLIN WRF
MODIFICATIONS AND EXPANSION PROJECT
COF CONTRACT NO. 2015-0163

UV SYSTEM
POWER PLAN

PROJECT NO 14915-96594-WRF
FILE NAME: E071UVPW.DWG
SHEET NO.
E-71

ISSUED FOR BID

XREFs: [CDMS_2436, ZMUVBS00, ZSUVBS00, EWZ001UV] Images: []
Last saved by: RUCKRM Time: 12/21/2017 4:08:09 PM
pw:\\pw.cdmsmith.com:PW_PL1\14915\96594\04 Design Services NM_Bid\09 Electrical\10 CADD\E071UVPW.dwg
© 2017 CDM SMITH ALL RIGHTS RESERVED.
REUSE OF DOCUMENTS: THESE DOCUMENTS AND DESIGNS PROVIDED BY PROFESSIONAL SERVICE, INCORPORATED HEREIN, ARE THE PROPERTY OF CDM SMITH AND ARE NOT TO BE USED, IN WHOLE OR PART, FOR ANY OTHER PROJECT WITHOUT THE WRITTEN AUTHORIZATION OF CDM SMITH.

XREFs: [CDMS_2436] Images: □
Last saved by: CHARITYRW Time: 12/7/2017 1:04:30 PM
C:\Users\charityrw\Desktop\PROJECT TEMP\1003PIDI.dwg
© 2017 CDM SMITH ALL RIGHTS RESERVED.
REUSE OF DOCUMENTS: THESE DOCUMENTS AND DESIGNS PROVIDED BY PROFESSIONAL SERVICE, INCORPORATED HEREIN, ARE THE PROPERTY OF CDM SMITH AND ARE NOT TO BE USED, IN WHOLE OR PART, FOR ANY OTHER PROJECT WITHOUT THE WRITTEN AUTHORIZATION OF CDM SMITH.

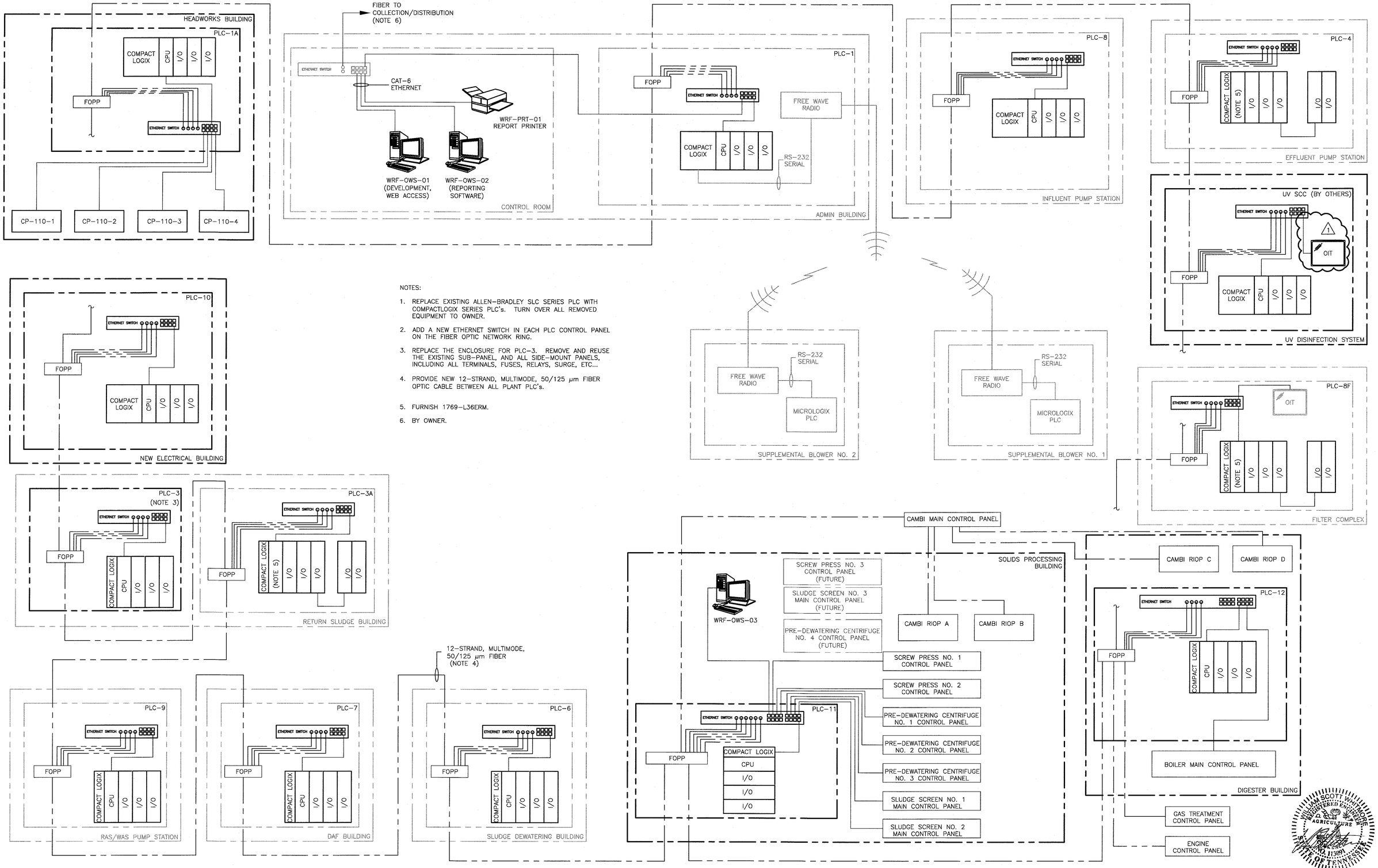

NOTES:

1. REPLACE EXISTING ALLEN-BRADLEY SLC SERIES PLC WITH COMPACTLOGIX SERIES PLC's. TURN OVER ALL REMOVED EQUIPMENT TO OWNER.
2. ADD A NEW ETHERNET SWITCH IN EACH PLC CONTROL PANEL ON THE FIBER OPTIC NETWORK RING.
3. REPLACE THE ENCLOSURE FOR PLC-3. REMOVE AND REUSE THE EXISTING SUB-PANEL, AND ALL SIDE-MOUNT PANELS, INCLUDING ALL TERMINALS, FUSES, RELAYS, SURGE, ETC...
4. PROVIDE NEW 12-STRAND, MULTIMODE, 50/125 µm FIBER OPTIC CABLE BETWEEN ALL PLANT PLC's.
5. FURNISH 1769-L36ERM.
6. BY OWNER.

REV. NO.	DATE	DRWN	CHKD	REMARKS
1	12/17	RWC	WSW	ADDENDUM NO. 12

DESIGNED BY: J. MITCHELL
DRAWN BY: N. MELLIN
SHEET CHK'D BY: D. UBERT
CROSS CHK'D BY: J. LIND
APPROVED BY: W. WHITMORE
DATE: AUGUST 2017

CDM Smith
Parkview Towers
210 25th Avenue North, Suite 1102
Nashville, TN 37203
Tel: (615) 320-3161

CITY OF FRANKLIN, TENNESSEE
FRANKLIN WRF
MODIFICATIONS AND EXPANSION PROJECT
COF CONTRACT NO. 2015-0163

SYSTEM ARCHITECTURE
WATER RECLAMATION FACILITY

PROJECT NO 14915-96594-WRF
FILE NAME: 1003PIDI.DWG
SHEET NO.
I-3

ISSUED FOR BID

XREFs: [CDMS_2436] Images: []
Last saved by: ESKANDERAN Time: 12/21/2017 17:27:27
C:\pw_pi1\ESKANDERAN\d0108428\I022PIDI.dwg
©2017 CDM SMITH ALL RIGHTS RESERVED
REUSE OF DOCUMENTS: THESE DOCUMENTS AND DESIGNS PROVIDED BY PROFESSIONAL SERVICE, INCORPORATED HEREIN, ARE THE PROPERTY OF CDM SMITH AND ARE NOT TO BE USED, IN WHOLE OR PART, FOR ANY OTHER PROJECT WITHOUT THE WRITTEN AUTHORIZATION OF CDM SMITH.

UV SYSTEM I/O
(NOTE 3)

HMI

PLC-4

RL 825 | XA 825 | HS 825

EFFLUENT FLOW

PACING | RUNNING | FAULT | MANUAL SAMPLE

II 825

SCC
UV SYSTEM CONTROL CENTER

PDC
POWER DISTRIBUTION CENTER
(TYP. OF 4)

RS 825 | XS 825

CP-825
AUTO SAMPLER
CONTROL PANEL

P-825
AUTO SAMPLER

ES- AIT 810 | IUVT | AE 810

LSH 815 1

AIT 815 1A | IUV | AE 815 1A

AIT 815 1B | IUV | AE 815 1B

LEVEL SENSOR CONTROL BOX

LSL 815 1

ES- LIT 815 | LE 815 D11

O/S/C | L/R | HS 810 1A | HS 810 1B | ZSC 810 1 | ZSO 810 1

SU-810-1
INFLUENT
SLUICE GATE NO. 1

UVM-815-1A
CHANNEL NO. 1
UV BANK NO. 1A

UV CHANNEL NO. 1

UVM-815-1B
CHANNEL NO. 1
UV BANK NO. 1B

L/R | O/S/C | XS 820 1 | ZT 820 1 | HS 820 1B | HS 820 1A

WG-820-1
EFFLUENT WEIR
GATE NO. 1

I-20
FROM ABW FILTER

54"-FEF-D-DI
TO EXISTING UV SYSTEM
(TO BE ABANDONED)

24"-FEF-T-DI

PERMANENT STOP PLATE

DB-800
UV INFLUENT
DIVERSION BOX

REMOVABLE STOP LOG

60"-FEF-DI-L80W10

54"-FEF-D-DI-L6080

I-20
FROM DENITRIFICATION FILTERS

MV-810-3

MV-815-1

AIT 815 2A | IUV | AE 815 2A

AIT 815 2B | IUV | AE 815 2B

LEVEL SENSOR CONTROL BOX

LSH 815 2

LSL 815 2

ES- LIT 815 2 | LE 815 2 D11

O/S/C | L/R | HS 810 2A | HS 810 2B | ZSC 810 2 | ZSO 810 2

SU-810-2
INFLUENT
SLUICE GATE NO. 2

UVM-815-2A
CHANNEL NO. 2
UV BANK NO. 2A

UVM-815-2B
CHANNEL NO. 2
UV BANK NO. 2B

UV CHANNEL NO. 2

INFLUENT BOX

L/R | O/S/C | XS 820 2 | ZT 820 2 | HS 820 2B | HS 820 2A

WG-820-2
EFFLUENT WEIR
GATE NO. 2

EFFLUENT BOX

54"-FEF-D-DI

54"-UVEFF-DI

PERMANENT STOP PLATE

60"-UVEFF-DI

DB-825
UV EFFLUENT
DIVERSION BOX

I-21
TO STEP AERATION, POST AERATION & REUSE PUMPS

54"-FEF-T-DI

PERMANENT STOP PLATE

FROM TERTIARY FILTERS
(TO BE ABANDONED)

MV-810-1 | MV-810-2 | MV-815-2 | MV-815-2

FUTURE CONNECTION TO UV CHANNEL NO.3 DRAIN

FUTURE CONNECTION TO UV CHANNEL NO.3 DRAIN

UV-815
UV DISINFECTION
SYSTEM

8"-D-DI

TO UV DRAIN MANHOLE

FURNISHED BY UV SUPPLIER

NOTES:

1. EXISTING UV SYSTEM WILL BE DEMOLISHED.
2. UV DESIGN IS BASED UPON A PRE-SELECTED UV DISINFECTION SYSTEM. REFER TO SPECIFICATION SECTION 11265.
3. REFER TO SPECIFICATION SECTION 11265 FOR LIST OF DATA AVAILABLE TO SCADA SYSTEM FROM UV PLC.

WILLIAM SCOTT WHITMORE
REGISTERED ENGINEER
AGRICULTURE
STATE OF TENNESSEE
12-22-2017

REV. NO.	DATE	DRWN	CHKD	REMARKS
1	12/17	RWC	WSW	ADDENDUM NO. 12

DESIGNED BY: W. WHITMORE
DRAWN BY: N. MELLIN
SHEET CHK'D BY: D. UBERT
CROSS CHK'D BY: J. LIND
APPROVED BY: W. WHITMORE
DATE: AUGUST 2017

CDM Smith
Parkview Towers
210 25th Avenue North, Suite 1102
Nashville, TN 37203
Tel: (615) 320-3161

CITY OF FRANKLIN, TENNESSEE
FRANKLIN WRF
MODIFICATIONS AND EXPANSION PROJECT
COF CONTRACT NO. 2015-0163

PROCESS AND INSTRUMENTATION DIAGRAM
UV DISINFECTION

PROJECT NO 14915-96594-WRF
FILE NAME: I022PIDI.DWG
SHEET NO.
I-22

ISSUED FOR BID

©2012 CDM SMITH ALL RIGHTS RESERVED. REUSE OF DOCUMENTS: THESE DOCUMENTS AND DESIGNS PROVIDED BY PROFESSIONAL SERVICE, INCORPORATED HEREIN, ARE THE PROPERTY OF CDM SMITH AND ARE NOT TO BE USED, IN WHOLE OR PART, FOR ANY OTHER PROJECT WITHOUT THE WRITTEN AUTHORIZATION OF CDM SMITH.

CDM Smith

DATE	SHEET NO.	LOCATION	ADDENDUM NO.	FIGURE NO.
DEC. 2017	I-33	B-3	12	SK-I33-1

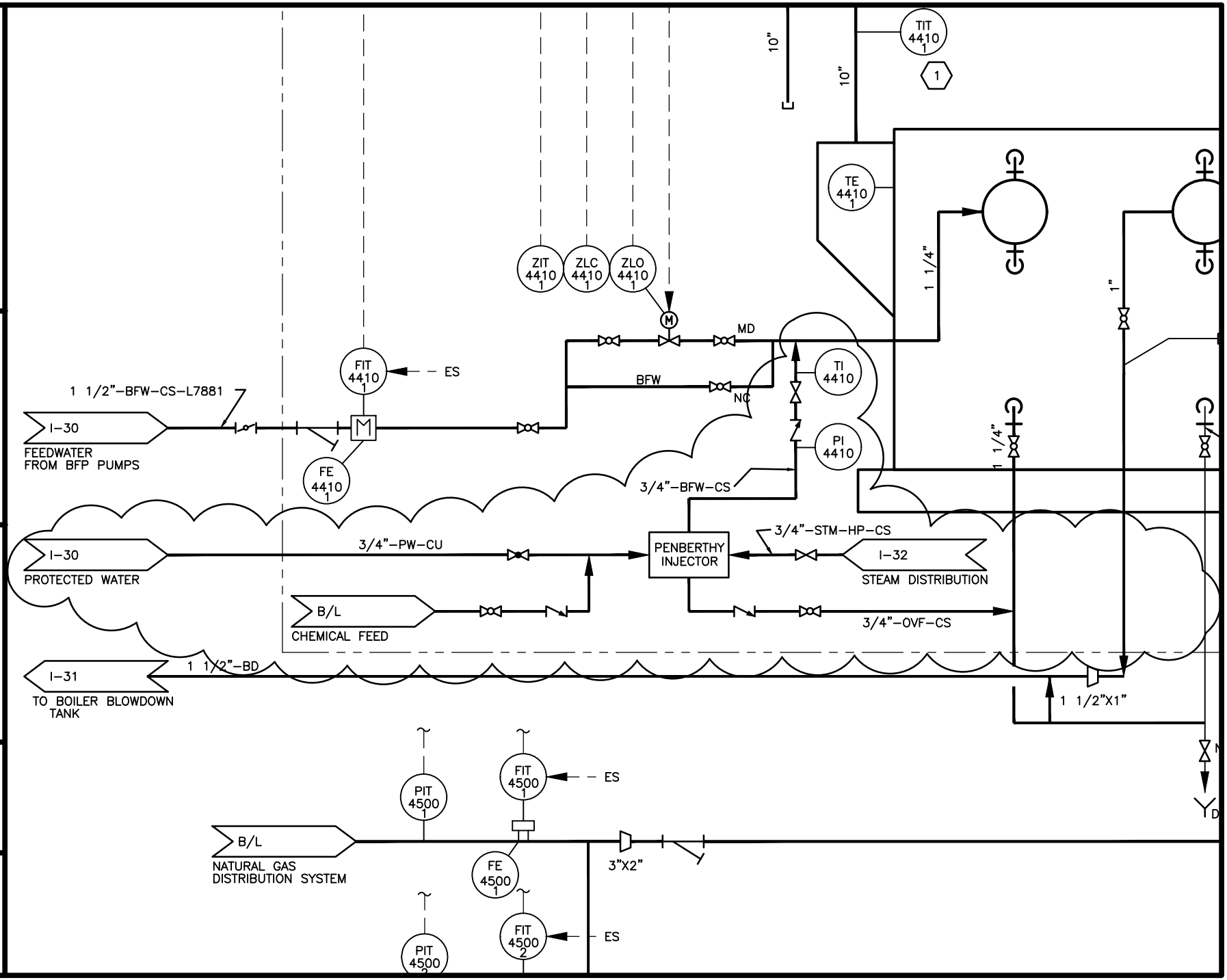

THESE DOCUMENTS AND DESIGNS PROVIDED BY PROFESSIONAL SERVICE, INCORPORATED HEREIN, ARE THE PROPERTY OF CDM SMITH AND ARE NOT TO BE USED, IN WHOLE OR PART, FOR ANY OTHER PROJECT WITHOUT THE WRITTEN AUTHORIZATION OF CDM SMITH.
© 2017 CDM SMITH ALL RIGHTS RESERVED.
REUSE OF DOCUMENTS:

XREFs: [CDMS_2436] Images: []
Last saved by: CHARITYRW Time: 12/19/2017 3:02:03 PM
C:\Users\charityrw\Desktop\PROJECT TEMP\I048PIDI.dwg

FIR 6315 — FLOW — PLC-12
AIR 6320 A — AIT 6320 A — H2S LEVEL — AE 6320 A — H2S
PIR 6320 A — PIT 6320 A — PRESSURE
DPIR 6320 — DPIT 6320 — DIFFERENTIAL PRESSURE
TIR 6320 A — TEMPERATURE
AIR 6320 B — AIT 6320 B — H2S LEVEL — AE 6320 B — H2S
TIR 6320 B — TIT 6320 B — TEMPERATURE — TE 6320 B
PIR 6320 B — PIT 6320 B — PRESSURE
LAHH 6325 — LEVEL HIGH HIGH
LIR 6325 — LEVEL
HS 6343 C — OPEN
HS 6343 D — CLOSE
XA 6343 — FAULT
ZI 6343 — POSITION
ZC 6343 — POSITION SETPOINT
PIR 6330 A — PRESSURE
TYPICAL OF TWO
XA 6330 1 — FAULT
ZL 6330 1 — REMOTE
RL 6330 1 — RUNNING
HS 6330 1 — START/STOP
SI 6330 1 — SPEED
SC 6330 1 — SPEED SETPOINT
ZLO 6330 1 — VALVE OPEN
PAH 6330 — PRESSURE HIGH
PIR 6330 B — PRESSURE
TYPICAL OF TWO
TIR 6330 — TEMPERATURE
TIR 6335 A — TEMPERATURE
XA 6335 1 — FAULT
ZL 6335 1 — REMOTE
RL 6335 1 — RUNNING
HS 6335 1 — START/STOP
TYPICAL OF TWO
TIR 6335 B — TEMPERATURE
XA 6340 1 — FAULT
ZL 6340 1 — REMOTE
RL 6340 1 — RUNNING
HS 6340 1 — START/STOP
TIR 6343 — TEMPERATURE
LAHH 6335 — LEVEL HIGH HIGH
LIR 6335 — LEVEL

SCADA
REFER TO SECTION 13305 FOR CONTROL DESCRIPTION
GAS CONDITIONING SKID CONTROL PANEL (DIVISION 11)

VFD TYP OF 2
CP-6330
GLYCOL CHILLER CONTROL PANEL
(DIVISION 11)
MS TYP OF 2
MS TYP OF 2

TIT 6343
TE 6343

O/S/C L/R
HS 6343 A
HS 6343 B
ZI 6343
ZC 6343
CV 6343

6"-DG-SST
6"-DG-SST
I-48A
CONDITIONED GAS TO SILOXANE REMOVAL

LSHH 6335
LIT 6335
LE 6335
DUAL CORE HEAT EXCHANGER

I-47
DIGESTER GAS

T-6320
H2S SCRUBBER NO. 1

8"-DG-SST

8"X6"

LSHH 6325
LIT 6325
T-6325
MOISTURE/PARTICULATE FILTER
DPI 6325
LI 6325
PIT 6330 A

6"X4"

B-6330-1
BLOWER NO. 1
B-6330-2
BLOWER NO. 2
ZSO 6330 1
ZSO 6330 2

PSH 6330
PIT 6330 B
TIT 6330
TE 6330
TI 6330

EX-6335
RE-HEAT HEAT EXCHANGER

GGC-6335
GAS TO GLYCOL HEAT EXCHANGER

TIT 6335 A
TE 6335 A
TI 6335 A

1 1/2"-CHWS-STL

TIT 6335 B
TE 6335 B
TI 6335 B

GC-6335
GLYCOL AIR COOLED CHILLER

P-6340-1
GLYCOL RECIRCULATION PUMP NO. 1
P-6340-2
GLYCOL RECIRCULATION PUMP NO. 2

FLOAT DRAIN

GAS CONDITIONING SKID
GLYCOL CHILLER

120VAC
DRIP TRAP
120VAC
DRIP TRAP

4"-COND-CPVC
4"-COND-CPVC
4"-COND-CPVC
4"-COND-CPVC

FIT 6315 — ES
FE 6315

8"-DRAIN-CPVC
8"-DRAIN-CPVC

I-29
TO CHP SYSTEM

I-48A
DRAIN
4"-COND-CPVC

B/L
TO MH-A-7

I-48A
CONDITIONED GAS FROM SILOXANE REMOVAL

I-33
TO BOILERS

WILLIAM S. WHITMORE
REGISTERED ENGINEER
AGRICULTURE
COMMERCE
NO. 113091
STATE OF TENNESSEE
12-20-2017

REV. NO.	DATE	DRWN	CHKD	REMARKS
1	12/17	NCM	WSW	ADDENDUM NO. 12 – REISSUED SHEET

DESIGNED BY: W. WHITMORE
DRAWN BY: M. RADHA
SHEET CHK'D BY: S. VIJAYAN
CROSS CHK'D BY: D. UBERT
APPROVED BY: W. WHITMORE
DATE: AUGUST 2017

CDM Smith
Parkview Towers
210 25th Avenue North, Suite 1102
Nashville, TN 37203
Tel: (615) 320-3161

CITY OF FRANKLIN, TENNESSEE
FRANKLIN WRF
MODIFICATIONS AND EXPANSION PROJECT
COF CONTRACT NO. 2015-0163

PROCESS AND INSTRUMENTATION DIAGRAM DIGESTER GAS SYSTEM (2 OF 3)

PROJECT NO 14915-96594-WRF
FILE NAME: I048PIDI.DWG
SHEET NO.
I-48

ISSUED FOR BID

© 2017 CDM SMITH ALL RIGHTS RESERVED.
REUSE OF DOCUMENTS: THESE DOCUMENTS AND DESIGNS PROVIDED BY PROFESSIONAL SERVICE, INCORPORATED HEREIN, ARE THE PROPERTY OF CDM SMITH AND ARE NOT TO BE USED, IN WHOLE OR PART, FOR ANY OTHER PROJECT WITHOUT THE WRITTEN AUTHORIZATION OF CDM SMITH.

XREFs: [CDMS_2436] Images: []
Last saved by: CHARITYRW Time: 12/19/2017 3:08:21 PM
C:\Users\charityrw\Desktop\PROJECT TEMP\I48APIDI.dwg

DPIR 6345 3
DPIR 6345 1
LAH 6345 1
LAH 6345 3
DPIR 6345 2
DPIR 6345 4
LAH 6345 2
LAH 6345 4
LAH 6350
PIR 6350

SCADA

REFER TO SECTION 13305 FOR CONTROL DESCRIPTION

DIFFERENTIAL PRESSURE
DIFFERENTIAL PRESSURE
LEVEL HIGH
LEVEL HIGH
DIFFERENTIAL PRESSURE
DIFFERENTIAL PRESSURE
LEVEL HIGH
LEVEL HIGH
LEVEL HIGH
PRESSURE

GAS CONDITIONING SKID PLC (BY VENDOR)

I-48
FROM BLOWERS

6"-DG-SST

VENT TO ATMOSPHERE
VENT TO ATMOSPHERE

PDIT 6345 1
PDIT 6345 2
PDIT 6345 3
PDIT 6345 4

LSH 6345 1
LSH 6345 2
LSH 6345 3
LSH 6345 4

T-6345-1
SILOXANE SCRUBBER NO. 1

T-6345-2
SILOXANE SCRUBBER NO. 2

T-6345-3
SILOXANE SCRUBBER NO. 3

T-6345-4
SILOXANE SCRUBBER NO. 4

LSH 6350
PDI 6350
LI 6350
PIT 6350

T-6350
PARTICULATE FILTER

I-48
CONDITIONED GAS

120VAC
DRIP TRAP
120VAC
DRIP TRAP

4"-COND-CPVC

I-48
DRAIN

WILLIAM S. WHITMORE
REGISTERED ENGINEER
AGRICULTURE
NUMBER
NO. 113091
STATE OF TENNESSEE
12-20-2017

REV. NO.	DATE	DRWN	CHKD	REMARKS
1	12/17	NCM	WSW	ADDENDUM NO. 12 – REISSUED SHEET

DESIGNED BY: W. WHITMORE
DRAWN BY: M. RADHA
SHEET CHK'D BY: S. VIJAYAN
CROSS CHK'D BY: D. UBERT
APPROVED BY: W. WHITMORE
DATE: AUGUST 2017

CDM Smith
Parkview Towers
210 25th Avenue North, Suite 1102
Nashville, TN 37203
Tel: (615) 320-3161

CITY OF FRANKLIN, TENNESSEE
FRANKLIN WRF
MODIFICATIONS AND EXPANSION PROJECT
COF CONTRACT NO. 2015-0163

PROCESS AND INSTRUMENTATION DIAGRAM DIGESTER GAS SYSTEM (3 OF 3)

PROJECT NO 14915-96594-WRF
FILE NAME: I48APIDI.DWG
SHEET NO.
I-48A

ISSUED FOR BID

PLAN HOLDER LIST

City of Franklin, Tennessee - Franklin WRF Modifications & Expansion Project
COF Contract No. 2017-0264 / CDM Smith Project No. 14915-96594-WRF
Bid Opening Date: Thursday, January 4, 2018, at 2:00 p.m. Central Time

Updated **12/19/17 12:15 PM** **For an updated plan holder list, please contact CDM Smith at (615) 320-3161**

Bid Set No.	Contact Name	Company	Address	E-Mail	Phone	Fax
1	Kendra Buhlig	Builders Exchange of Tennessee	2322 Winford Avenue, Nashville, Tennessee 37211 and 300 Clark Street, Knoxville, Tennessee 37921	kendra@bxtn.org	615-690-7200	615-690-7201
2	Marilyn Robinson	Nashville Minority Business Center	1919 Charlotte Avenue, Suite 310, Nashville, Tennessee 37203		615-340-5004	
3	Patricia McNeese	City of Franklin Engineering Department	109 Third Avenue South, Franklin, Tennessee 37065	patricia.mcneese@franklintn.gov	615-550-6674	
4	Juan Davis	Franklin WRF	135 Claude Yates Drive, Franklin, Tennessee 37064	juand@franklintn.gov	615-791-3240	615-791-3208
5	Zack Daniel	CDM Smith	210 25th Avenue North, Suite 1102, Nashville, Tennessee 37203	danielza@cdmsmith.com	615-320-3161	
6	Steve Judy & Clinton Jones	Judy Construction/ Smith Contractors, Inc. Joint Venture	Judy Construction: 103 South Church Street, Cynthiana, Kentucky 41031; PO Box 457, Cynthiana, Kentucky 41031	sjudy@judyconstructionco.com; cjones@judyconstructionco.com	859-234-6900 (Judy Construction)	859-234-3480 (Judy Construction)
7	Teresa Lee-Ross	Kiewit Infrastructure South Co.	8615 Freeport Parkway, Suite #100, Irving, Texas 75063	Teresa.Leeross@kiewit.com	817-805-7391	
8	Andi Neighbors	Brasfield & Gorrie	3021 7th Avenue South, Birmingham, AL 35233	ANeighbors@BrasfieldGorrie.com	205-714-1635	

PLAN HOLDER LIST

City of Franklin, Tennessee - Franklin WRF Modifications & Expansion Project
COF Contract No. 2017-0264 / CDM Smith Project No. 14915-96594-WRF
Bid Opening Date: Thursday, January 4, 2018, at 2:00 p.m. Central Time

Updated **12/19/17 12:15 PM** **For an updated plan holder list, please contact CDM Smith at (615) 320-3161**

Bid Set No.	Contact Name	Company	Address	E-Mail	Phone	Fax
9	Erik Reynolds	Garney Construction	200 Crutchfield Avenue, Nashville, TN 37210	Flestimating@garney.com	615-953-2306	
10	Codee Guffey	Judy Construction/ Smith Contractors, Inc. Joint Venture	Smith Contractors: 1241 Bypass N., Lawrenceburg, KY 40342; PO Box 480, Lawrenceburg, KY 40342	cg@sci82.com	502-839-4196 (Smith Constractors)	502-839-8348 (Smith Contractors)
11	Kathy Marshall	Dodge Data & Analytics	Plan Coordinator: 4300 Beltway Place, Ste 180, Arlington, TX 76018	kathy.marshall@construction.com	912-351-4504	

REQUEST FOR AUTHORIZATION OF ADDITIONAL CLASSIFICATION AND RATE

CHECK APPROPRIATE BOX
☐ SERVICE CONTRACT
☐ CONSTRUCTION CONTRACT

OMB Control Number: 9000-0089
Expiration Date: 10/31/2019

PAPERWORK REDUCTION ACT STATEMENT: Public reporting burden for this collection of information is estimated to average .5 hours per response, including the time for reviewing instructions, searching existing data sources, gathering and maintaining the data needed, and completing and reviewing the collection of information. Send comments regarding this burden estimate or any other aspects of this collection of information, including suggestions for reducing this burden, to U.S. General Services Administration, Regulatory Secretariat (MVCB)/IC 9000-0089, Office of Governmentwide Acquisition Policy, 1800 F Street, NW, Washington, DC 20405.

INSTRUCTIONS: THE CONTRACTOR SHALL COMPLETE ITEMS 3 THROUGH 16, KEEP A PENDING COPY, AND SUBMIT THE REQUEST, IN QUADRUPLICATE, TO THE CONTRACTING OFFICER.

1. **TO:** ADMINISTRATOR, WAGE AND HOUR DIVISION U.S. DEPARTMENT OF LABOR WASHINGTON, DC 20210	2. **FROM:** *(REPORTING OFFICE)*
3. CONTRACTOR	4. DATE OF REQUEST

5. CONTRACT NUMBER	6. DATE BID OPENED *(SEALED BIDDING)*	7. DATE OF AWARD	8. DATE CONTRACT WORK STARTED	9. DATE OPTION EXERCISED (If *APPLICABLE) (SERVICE CONTRACT ONLY)*

10. SUBCONTRACTOR *(IF ANY)*

11. PROJECT AND DESCRIPTION OF WORK *(ATTACH ADDITIONAL SHEET IF NEEDED)*

12. LOCATION (*CITY, COUNTY AND STATE)*

13. IN ORDER TO COMPLETE THE WORK PROVIDED FOR UNDER THE ABOVE CONTRACT, IT IS NECESSARY TO ESTABLISH THE FOLLOWING RATE(S) FOR THE INDICATED CLASSIFICATION(S) NOT INCLUDED IN THE DEPARTMENT OF LABOR DETERMINATION

NUMBER: _____ DATED: _____

a. LIST IN ORDER: PROPOSED CLASSIFICATION TITLE(S); JOB DESCRIPTION(S); DUTIES; AND RATIONALE FOR PROPOSED CLASSIFICATIONS *(Service contracts only)*	b. WAGE RATE(S)	c. FRINGE BENEFITS PAYMENTS
(Use reverse or attach additional sheets, if necessary)		

14. SIGNATURE AND TITLE OF SUBCONTRACTOR REPRESENTATIVE *(IF ANY)*	15. SIGNATURE AND TITLE OF PRIME CONTRACTOR REPRESENTATIVE	
16. SIGNATURE OF EMPLOYEE OR REPRESENTATIVE	TITLE	CHECK APPROPRIATE BOX-REFERENCING BLOCK 13. ☐ **AGREE** ☐ **DISAGREE**

TO BE COMPLETED BY CONTRACTING OFFICER *(CHECK AS APPROPRIATE - SEE FAR 22.1019 (SERVICE CONTRACT LABOR STANDARDS) OR FAR 22.406-3 (CONSTRUCTION WAGE RATE REQUIREMENTS))*

☐ THE INTERESTED PARTIES AGREE AND THE CONTRACTING OFFICER RECOMMENDS APPROVAL BY THE WAGE AND HOUR DIVISION. AVAILABLE INFORMATION AND RECOMMENDATIONS ARE ATTACHED.

☐ THE INTERESTED PARTIES CANNOT AGREE ON THE PROPOSED CLASSIFICATION AND WAGE RATE. A DETERMINATION OF THE QUESTION BY THE WAGE AND HOUR DIVISION IS THEREFORE REQUESTED. AVAILABLE INFORMATION AND RECOMMENDATIONS ARE ATTACHED.

(Send 3 copies to the Department of Labor)

SIGNATURE OF CONTRACTING OFFICER OR REPRESENTATIVE	TITLE AND COMMERCIAL TELEPHONE NUMBER	DATE SUBMITTED