P100

Heating Area 20" X 51"

WWW.ASPHALTHEATER.COM

Regulator

- Adjustable regulator to control the temperature of the heater.
- C.S.A. & C.G.A. approved propane regulator

Valves & Fittings

- C.S.A. approved valves
- C.S.A. approved type III propane hose

T Handles

- Removable T handle for better maneuverability on any paved surface.

Casters

- Heavy duty cast iron caster with grease fitting.
- Two wheels are equipped with roll lock brake kits.
- Wheels can rotate from front to side to maneuver around objects.

Stainless Steel Pipe

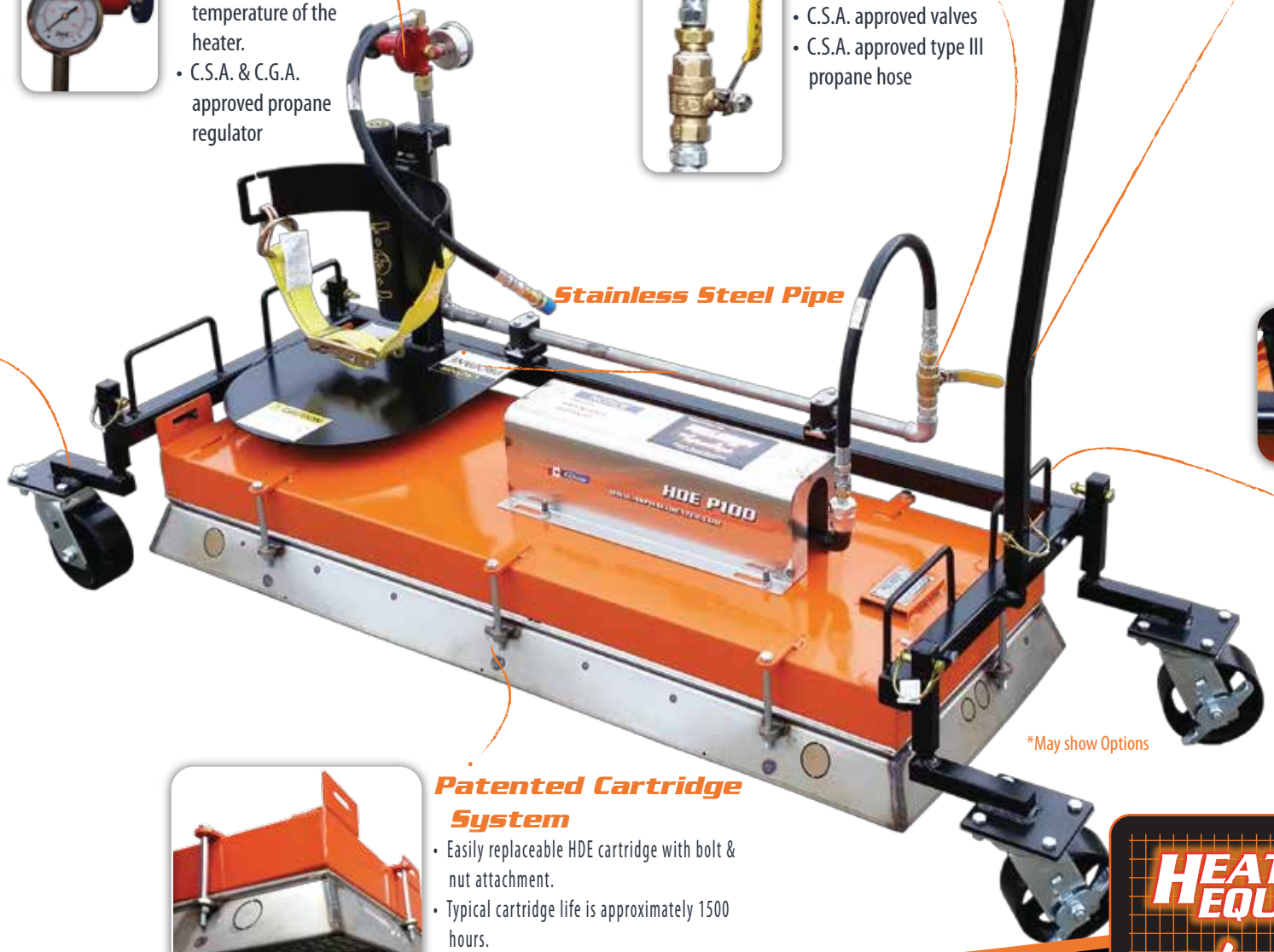

Lifting Handles

- Lifting handles for lifting onto a truck or trailer.

*May show Options

Patented Cartridge System

- Easily replaceable HDE cartridge with bolt & nut attachment.
- Typical cartridge life is approximately 1500 hours.

HEAT DESIGN EQUIPMENT INC.
The Infrared People

P100

Heating Area
20" X 51"

WWW.ASPHALTHEATER.COM

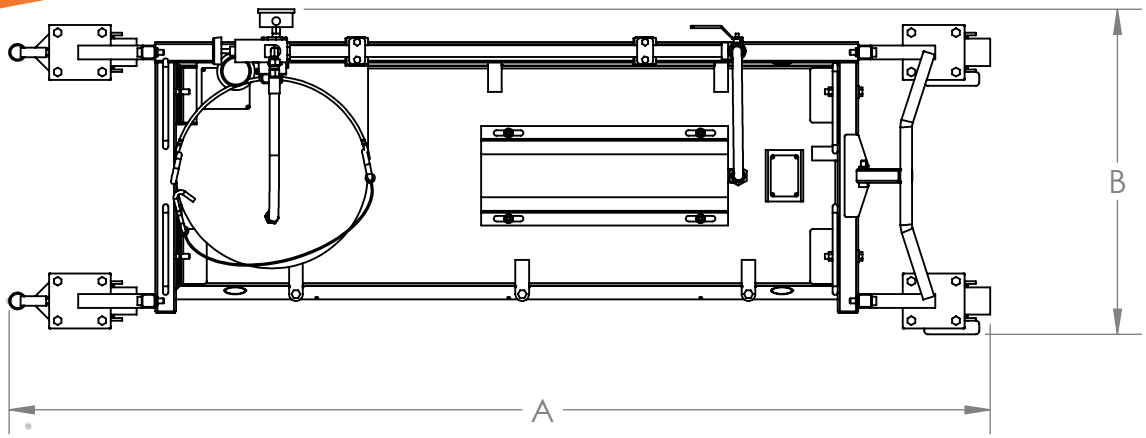

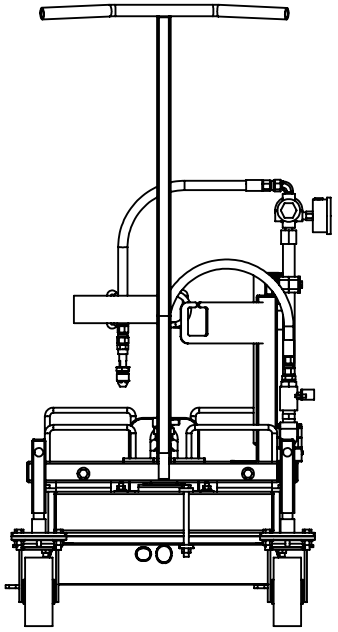

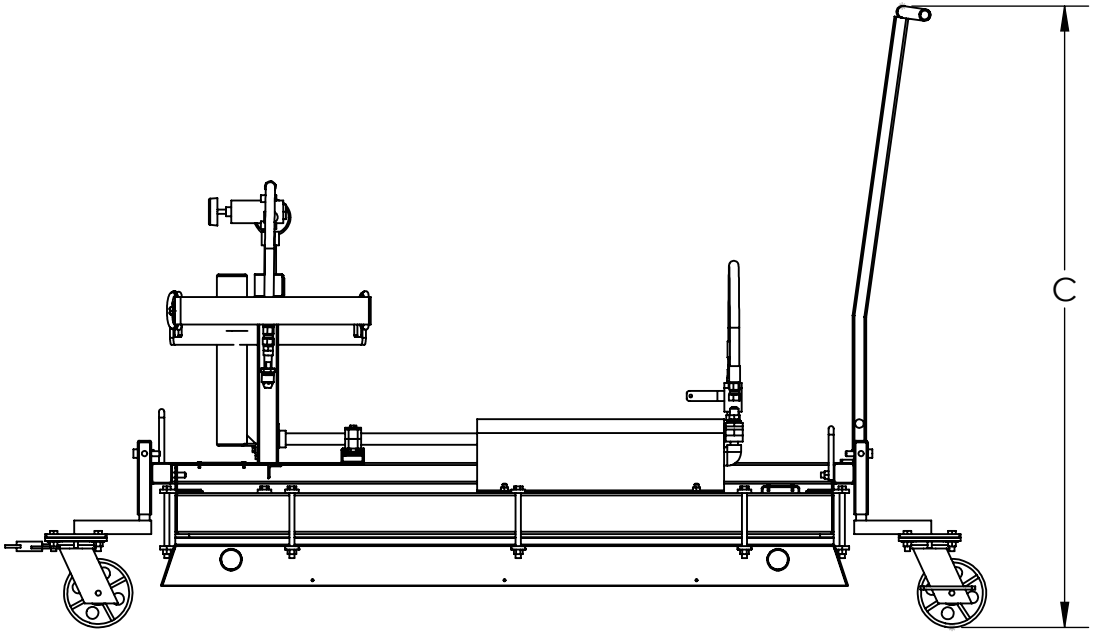

LETTER	DESCRIPTION	DIMENSION
A	OVERALL LENGTH	71"
B	OVERALL WIDTH	23-3/4"
C	OVERALL HEIGHT	45-3/8"

HEAT DESIGN EQUIPMENT INC.
The Infrared People